ENG

Patented Technology
MADE IN ESTONIA

INSTRUCTIONS FOR USE AND INSTALLATION

saunum

Saunum sauna control unit **AirIQ**

V_26_10.2

THE BEST SAUNA EXPERIENCE TO HAVE!

I am very glad that you have invested in the Saunum device, and I believe that our innovative technology will offer you a wonderful and extraordinary sauna experience.

I have a degree in thermal engineering and come from Southern Estonia, where my love for saunas began. The special feature of local historic smoke saunas is the lower temperature and higher humidity level than, for example, a classic Finnish sauna. In ordinary saunas, the stone volume of the sauna heater is generally small. Such an arrangement can cause a sudden, burning hot steam and an extremely uneven temperature, where your head and shoulder level is really hot, but your feet are left cold. Such an experience can be quite unpleasant and may cause headaches and lead to body stress. However, in ancient smoke saunas and Native American saunas, the stones were first heated during the day. Then the heat stored in the stones was used to cleanse the body and create a truly enjoyable sauna experience.

Inspired by the experience of a smoke sauna, I wanted to create an innovative solution that combines the best features of an authentic sauna with modern technology; enabling a pleasantly mild and relaxing sauna experience without painfully scorching steam. For that, however, I had to solve the problem of how to achieve an even temperature, at both the head and foot levels. My development work was supported by research done alongside Tallinn University of Technology,

in which we analysed the thermal stratification and air movement in the sauna room. Saunum was born in cooperation between scientific thinking and technological innovation.

Saunum's unique patented mixing system of air layers captures the hot steam that rises under the ceiling of the sauna room, mixes it with the cooler air from the surface of the floor, and directs the milder steam back evenly. This makes for an enjoyable, unaggressive heat. You can sit in the sauna for a longer time, and enjoy a sweat and a deep cleanse without feeling tired. The stone volume of our heaters is significantly larger than other sauna heaters, which is the reason for the especially pleasant indoor climate with long and soft steam.

A moist steamy sauna, a therapeutic salt sauna, or a healthy aroma sauna – all of these functions are available on Saunum's devices to create a truly relaxing sauna experience. When using Himalayan salt spheres in our device, salt ions that are beneficial to skin and respiratory tract evaporate and the steam circulates these into the air. Adding a sauna aroma system that blends steam and healthy aroma oil creates an even more enjoyable sauna environment.

Saunum's sauna devices are suitable for both adults and children.

Have a pleasant sauna!

Andrus Vare
The creator of Saunum

Saunum **congratulates you** on choosing an innovative sauna control unit!

CONTENTS

Warnings and notes 6 - 7
Using the heater and instructions for bathing 8
Main functions of the control panel 9
Control unit set 10
Technical data 11-12
Electrical connections 13-15

INSTRUCTIONS FOR INSTALLATION

Installing the control panel 16-17
Installing the door sensor 18
Installing the Air Button 19-20
Installing the temperature sensor 21
Thermal cutoff 22
Installing the control unit 23

DIRECTIONS FOR USE

Indicators 24
Control panel views 25
Control panel initial setup 26-30
Sauna types 30–31
Controlling your sauna session 31–32
Heating 32–33
Cooling 33
Sauna scheduling 34–35
Using the Air Button 35
Warranty conditions 36

Installation report 37

WARNINGS AND NOTES

All users of this product must read the warnings and manual carefully before using the product! Failure to follow the instructions could result in personal injury, death, fire, and/or property damage, and the device's warranty may be voided.

The control panel is used to control the sauna heater and the functions of the control unit.

It is not to be used for any other purpose!

Children, people with reduced mobility, and people with health conditions should use the device only under constant and close adult supervision.

People with reduced physical, sensory, or mental capabilities, or persons with a lack of experience and knowledge, should use this device only under constant and close adult supervision and only after consulting with a physician.

Before using the sauna, all users should consult with a physician to ensure that they have no health conditions that would make sauna bathing unsafe, and discuss time and temperature limitations. Pregnant women should consult their physician before using the sauna. Excessive body temperatures have the potential to cause fetal damage during early pregnancy.

Use of drugs, medication, or alcohol before or during the sauna session may lead to dizziness or unconsciousness, resulting in injury or death. No person should use this product while under the influence of alcohol or drugs. Persons taking medications should consult with their physician to ensure that it is safe to use the sauna while taking their medications. Users should place a towel between their skin and sauna bench, backrest, or wall while sitting or lounging in the room. When using the sauna, be aware of the dangers associated with going to the sauna. Do not stay in the sauna room for more than 30 minutes at a time.

WARNINGS AND NOTES

Prolonged exposure to steam can be harmful or fatal. Users should discontinue using the sauna if they feel light-headed, dizzy, or experience heat exhaustion. It is prohibited to sleep inside the heated sauna. Users should take care to avoid falling asleep while using the sauna.

The electrical device should only be connected to the power and/or utilities in accordance with all laws and regulations by a licensed, professional, certified electrician.

After connecting and installing the control unit set, the installer must inform the sauna owner or operator of all operating requirements.

The requirements for use must be given by the owner or operator to everyone who uses the sauna.

All maintenance other than regular surface cleaning of the product must be performed by a trained professional.

Always disconnect the device from the power and/or utilities before carrying out any maintenance work!

- Check the control unit set for visible damage before installation and use. Do not use a damaged device or a device that has been modified from the original manufacturer's condition in any way.
- It is vital to install the device according to the instructions for installation and use. Failure to carefully follow all instructions can create a risk of fire or a short circuit, leading to property damage, bodily injury, or death.
- No accessories that the manufacturer has not approved should be installed in this device. If suitable accessories are installed in the device, follow the accessory-specific operating and installation instructions!
- If the supply cord is damaged, it must be replaced by the manufacturer's service partner or a similarly qualified licensed, professional, certified electrician to avoid a hazard.
- Clean the control panel by using a lightly moistened cloth. Use only mild cleaning agents, never solvents or corrosive chemicals. Allow the product to dry thoroughly before operation.
- This product should not be disposed of with general household waste. When recycling your product, take it to your local collection facility or contact the place of purchase.

USING THE HEATER AND **INSTRUCTIONS FOR BATHING**

- Always check before heating that there are no objects on the heater or within the heater's safety distance specified in the heater manufacturer's manual.
- Always check that the heater has switched off and stopped heating after the on-time period has elapsed.
- In public saunas, where the heater is operated beyond the time limits set by the heater timer or control unit, the device must be under constant supervision by an adult who is not using the sauna.
- When the control unit is set to standby mode for remote activation, it must be ensured in advance that there are no objects in the sauna room or on the heater that do not match the safety distances specified in the heater manufacturer's instructions.
- Prolonged sauna use can damage your health or cause death.
- **Do not stay in the sauna room for more than 30 minutes at a time.**
- Leave the sauna room if you feel sleepy, dizzy, or weak.
- Do not dry objects or living things in the sauna.

USING THE HEATER WITH THE CONTROL UNIT

The heating elements will automatically turn off when the sauna room reaches the temperature selected on the control panel.

The control unit set will automatically turn the heating elements on and off to maintain the desired temperature.

The heater will turn off when the set time ends, the "Stop" button is pressed, or an error occurs.

MAIN FUNCTIONS OF THE **CONTROL PANEL**

- Controls the sauna temperature and the speed of the fan.
- Enables three preset sauna types that can be changed and updated by the sauna owner.
- Enables the user to select a time for the sauna to be ready for entry and enjoyment.
- A notification will appear on the control panel when the sauna is ready. Using the Saunum app, an alert will also be sent to your smartphone.
- Multiple language options.
- Touchscreen interface.
- Passcode protection: Admin Lock and Screen Lock.
- Overheating protection.
- The desired functions can be selected from the control panel.
- Remote control – with the Saunum mobile app.

Devices with in-app support enabled can also be controlled and configured via a mobile phone.

According to IEC/EN 60335-2-53, the control system may be used for remote control of the heater only if a door sensor is installed. The heater can only be switched on remotely when the door is closed. If the door sensor circuit is open, the heater will not start.

After installation of the control unit set, the installer should give this manual to the owner of the sauna. The product owner should provide access to the manual to all persons using or operating the sauna. Please read more instructions for installation, use, and recycling. Saunum reserves the right to modify this manual from time to time, and modifications will be posted to **www.saunum.com**. Failure to follow the instructions could result in personal injury, death, fire, and/or property damage, and the device's warranty may be voided.

CONTROL UNIT SET

The Saunum AirIQ control unit set consists of:

1. **control panel**
2. **Air Button**
3. **control unit**
4. **temperature sensor**
5. **door sensor with cable**
6. **temperature sensor, Air Button and control panel connection cables**

Using the control panel, you can preset the desired temperature, date, and time, switch the heater on and off, and control the fan speed of the Saunum sauna climate device.

The Air Button controls the fan speed. Use it to control the fan speed and air circulation of the sauna climate device directly from inside the sauna.

The sauna room temperature is regulated based on data measured and transmitted by the temperature sensor.

The sensor is equipped with an overheat protection feature and is located inside the temperature sensor housing (see p. 22).

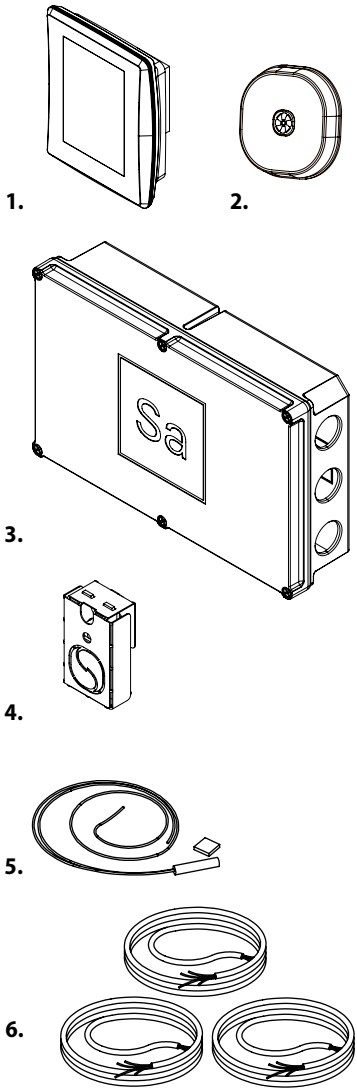

TECHNICAL DATA

CONTROL PANEL (IP22):

- Temperature adjustment range: 40–100 °C.
- Pre-setting the schedule for the week.
- Allows you to set the heater operating time: up to 12 hours in a private sauna, up to 18 hours in a public sauna.
- For longer operating times, consult the importer/manufacturer.
- Integrated 3-speed fan control.
- Dimensions: 20 × 85 × 105 mm.
- Working temp. range: -30 °C to +80 °C.

CONTROL UNIT (IP44):

- Supply voltage: 230 V 3N~ 50/60 Hz.
- Heater power rating up to 9 kW / 12 kW (16 A / 20 A).
- For higher-power heaters, an additional contactor box is required.
- Dimensions: 61 × 160 × 225 mm.
- Safety device: overheat protector in temperature sensor and door sensor.

TECHNICAL DATA

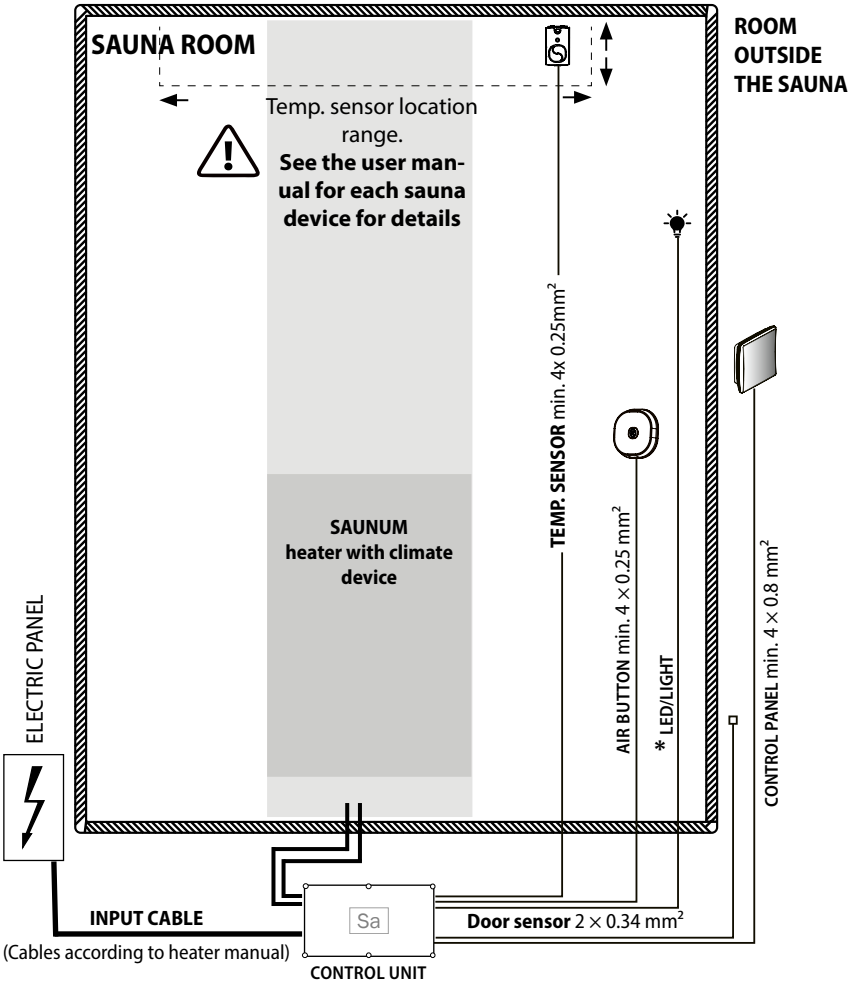

* The ability to turn on the light from the control panel.
Light not included.

ELECTRICAL
CONNECTIONS

The connection of the control unit power board is shown on the diagram of electrical connections.

For more information on connecting the heater, see the heater installation and operating instructions.

If the connection and installation cables are located higher than 1,000 mm from the sauna room floor or routed inside the walls, they must be rated to withstand temperatures of at least 125 °C (e.g., SSJ-type cables). Electrical equipment installed in the sauna room below 1,000 mm from the floor must be rated for at least 90 °C (e.g., T125-class components).

RECOMMENDED CABLE SIZES

Temperature sensor - thermal protection (silicone or other heat-resistant material rated for at least 140 °C):	min. 4 × 0.25 mm^2
Control panel (a ferrule extension sleeve is required for stranded cables):	min. 4 × 0.8 mm^2
Door sensor cable	min. 2 × 0.34 mm^2
Air Button cable - thermal protection (silicone or other heat-resistant material rated for at least 140 °C):	min. 4 × 0.25 mm^2

ELECTRICAL CONNECTIONS

WIRING DIAGRAM FOR **PRIMARY** OR **PREMIUM** HEATER

Electrical wiring diagram for Primary or Premium heater for controlling fan speeds with the control unit.

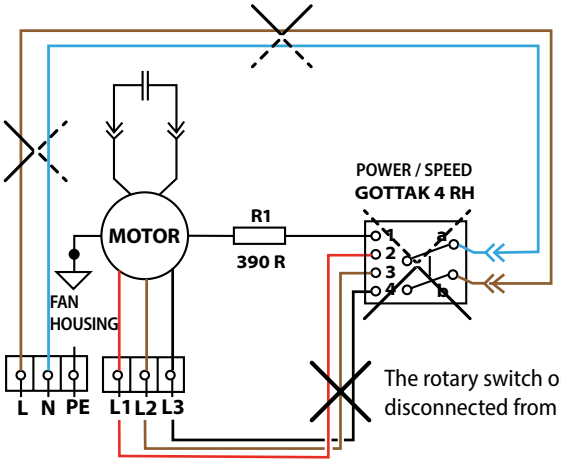

The rotary switch on the heater must be disconnected from the power circuit.

Wiring diagram for controlling the Saunum climate device with the Saunum control unit.

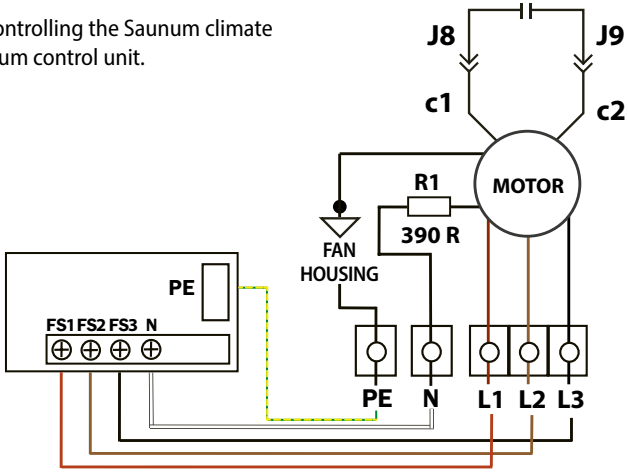

The controller connection is shown in the wiring diagram. For additional information on connecting the heater, see the heater installation and user manual.

ELECTRICAL CONNECTIONS

CONTROL UNIT

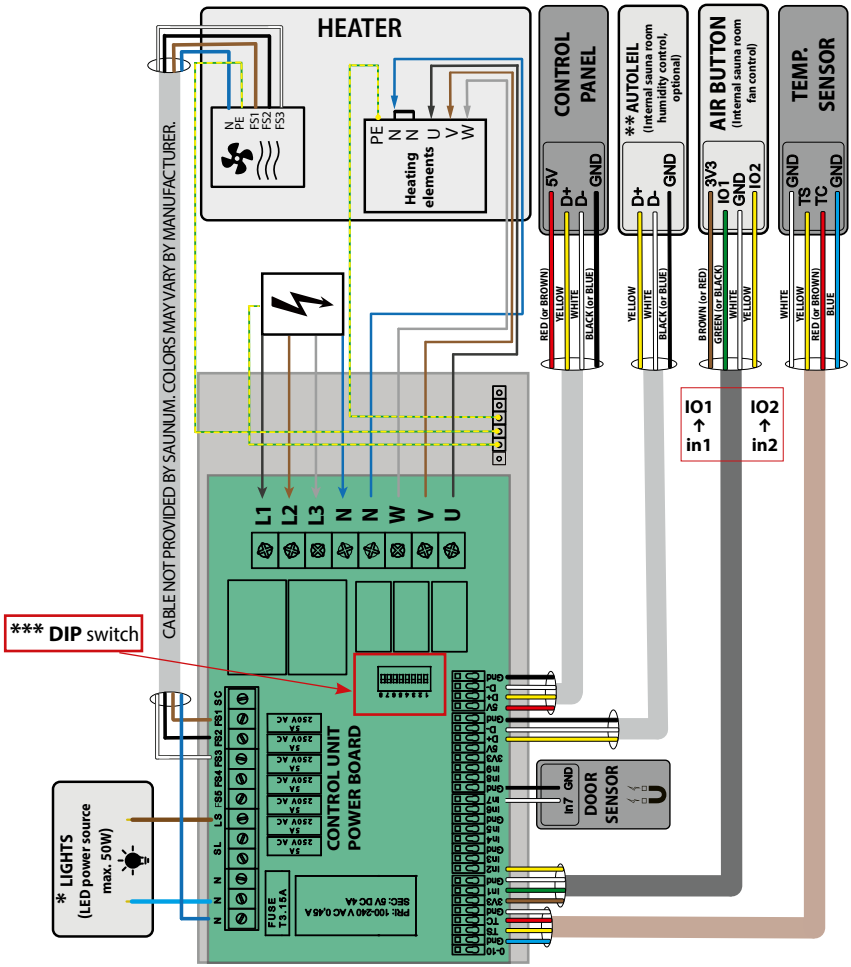

* The power supply for LED lights (max 50W) must be equipped with an inrush current limiter. For loads exceeding 50 W, the circuit must be used for switching purposes only.

** AutoLeil is sold separately

*** **WARNING! Do not change the factory setting of the controller DIP switch. The DIP switch must remain in its factory-set configuration**

INSTRUCTIONS
FOR INSTALLATION

WARNING! Failure to install the product in accordance with all instructions herein will void the warranty. It can result in the risk of fire and/or electrical short-circuiting, leading to property damage, bodily injury, or death.

A licensed professional electrician may only do the installation of the control unit in accordance with current regulations. The person in charge of the installation should provide the necessary training and return the user manual to the product owner after completing the installation. The product owner should provide access to the manual to all persons using or operating the product.

INSTALLING
THE CONTROL PANEL

The mounting bracket is compatible with standard electrical junction boxes with 68 mm hole spacing.

The control panel must be installed on the wall outside the sauna room, in a place protected from water splashes. It must be installed inside a protective enclosure when used outdoors.

1. **Remove the wall mount from the device.**

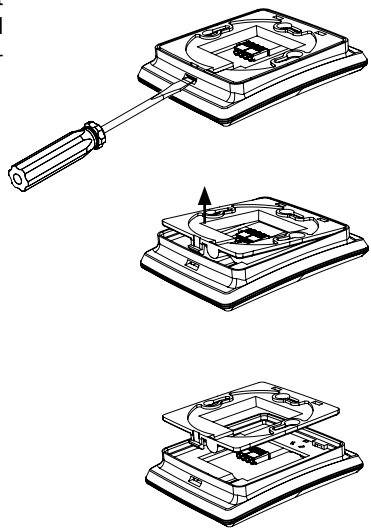

2. **Thread the data cable through the hole in the wall mount and fasten the wall mount to the wall with screws.**

min. 4 × 0,8 mm²

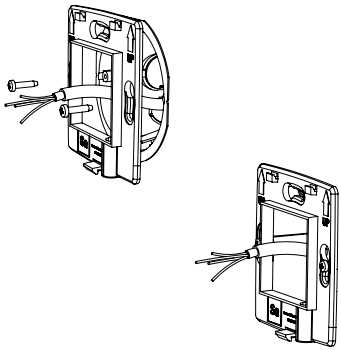

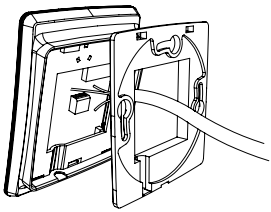

3. **Connect the data cable to the panel connector.**

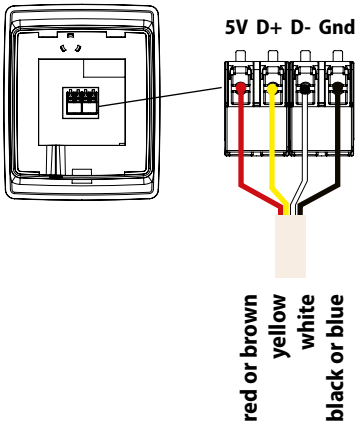

4. **Press the control panel into the wall mount.**

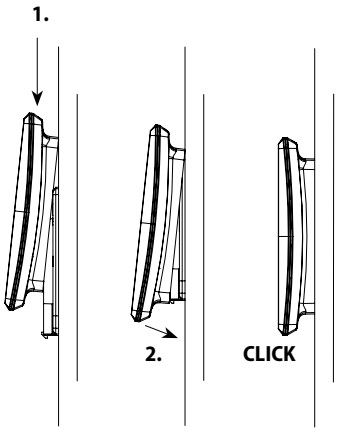

INSTALLING
THE DOOR SENSOR

The door sensor is a magnetic switch that is attached to the door frame of the sauna room.

When the door is closed, the circuit of the door sensor closes, allowing the sauna control unit to operate.

The door sensor prevents the risk of overheating caused by a door that has been left open.

The door sensor consists of two components:
a sensor and a permanent magnet.

- Connect the cable to the sensor wires.
- Attach the magnet to the door using double-sided tape. It must allow the door to close and be positioned close to the door frame.
- Attach the sensor to the door frame, aligning the sensor and the magnet when the door is in the closed position.
- The maximum gap between the sensor and the magnet when the door is closed must not exceed 5 mm

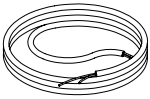

Extension is permitted using a 2 × 0.34 mm^2 cable.

DOOR SENSOR

MAGNET - place it on the door

SENSOR

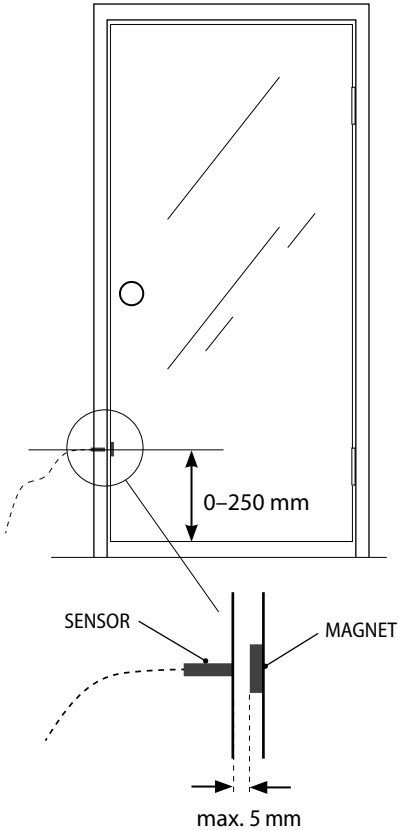

INSTALLING
THE AIR BUTTON

Install the Air Button inside the sauna room. The button may be installed on the sauna wall or on the bench.

Install the button at a practical and easily accessible height for the user.

The button must be installed:

– no higher than 1300 mm above the floor;

– at least 500 mm from the heater.

If the connection and installation cables are located higher than 1,000 mm from the sauna room floor or routed inside the walls, they must be rated to withstand temperatures of at least 125 °C (e.g., SSJ-type cables).

For concealed installation, the data cable can be installed inside a protective tube within the wall. If this is not possible, the cable must be installed on the wall surface.

The Air Button is IPX2-rated and must be installed on a wall area protected from water splashes.

Installation steps:

1. Use the printed template to mark the locations for the screw holes and for the cable opening (Ø 20–23 mm). If the cable is not concealed inside the wall, the opening may be only 5 mm deep or formed as a groove using a sharp blade.

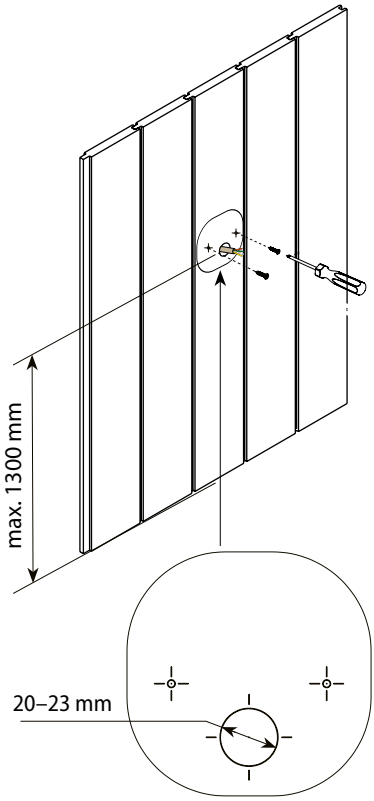

printed template

2. Install the screws, leaving the heads protruding 3–4 mm from the wall. Drill the cable opening through the wall and route the cable to the opening. Pull enough cable through to connect it to the button terminals.

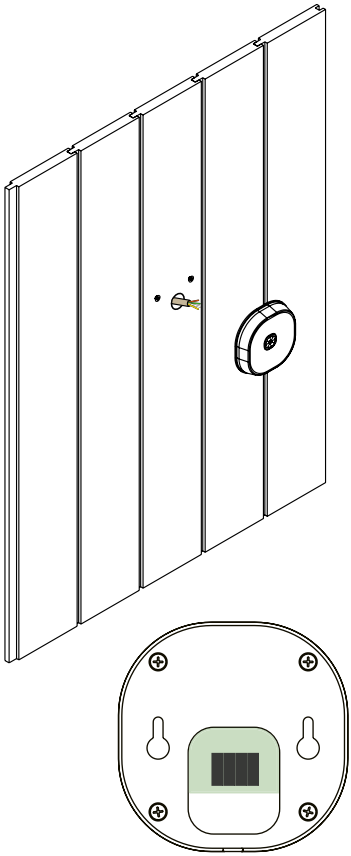

3. Connect the wires to the Air Button connector. For Air Perfect, connect the wires to the control unit via the terminal block. Make sure the wires are connected to the control unit using the same colour code order (see the illustration below).
4. Attach the Air Button to the wall by aligning the screw heads with the keyholes on the back of the button.

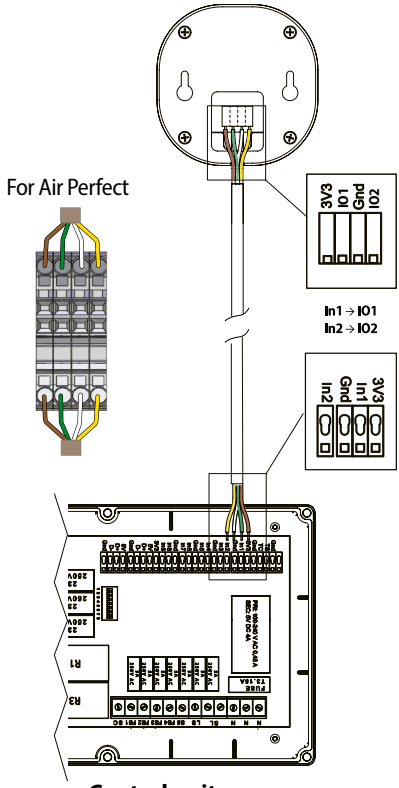

INSTALLING **THE TEMPERATURE SENSOR**

⚠ To install the temperature sensor/ overheat protection, proceed as follows.

- Connect the cable to the temperature sensor's plugs.
- Screw the temperature sensor onto the wall (see figure).
- The required location of the temperature sensor depends on the Saunum climate device. Refer to the user manual for the relevant device for detailed sensor placement instructions.
- The temperature sensor must not be installed near any air openings (such as ventilation openings, doors, or windows) and must be located at least **500 mm** away from the air intake.
- **The sensor must remain unobstructed on all sides except the back.**

The airflow near an air vent cools down the sensor, giving the control unit inaccurate temperature readings.

As a result, the heater may overheat.

In the event of overheating, follow the instructions on **page 22.**

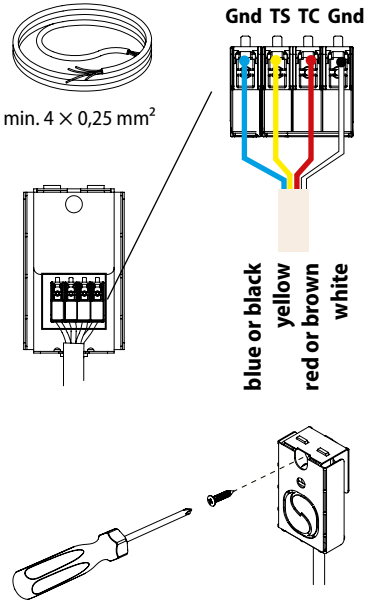

CONTROL PANEL MESSAGE **"THERMAL CUTOFF"**

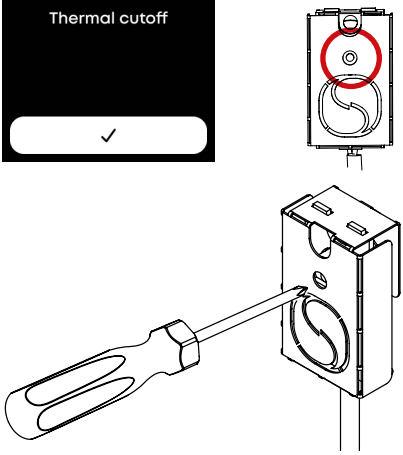

During a sauna session, the sauna room or the heater may overheat, activating the **thermal cutoff** for safety. In this case, heating stops automatically.

ACTIONS

Although all sauna functions are disabled when the thermal cutoff is activated, the sauna screen remains active so that the user can view the current sauna status, the set target temperature, and other relevant information.

1. Stop the sauna session by pressing **STOP** on the control panel.
2. Allow the sauna room to cool down for approximately **10 minutes** or until the temperature reaches about **60–65 °C**.
3. **After that**, reset the **temperature sensor** by pressing the reset button located in the temperature sensor housing on the wall.

After **resetting** the sensor, the **control unit** should resume operation within **2 to 3 minutes.**

If the automatic restart does not occur, make sure the sensor has been reset correctly, then switch off the main circuit breaker, wait 10 seconds, and switch it back on.

If the error still persists after restarting the system, contact an authorized service center.

INSTALLING
THE CONTROL UNIT

The installation spot must be dry, and its temperature must not exceed 40 °C.

1. Open the cover of the control unit. Open the control unit enclosure and make the required connections according to the diagram on page 15.

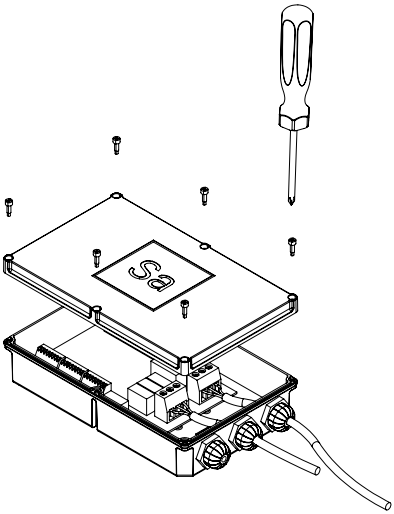

2. Drill holes in the case and attach the control unit to the wall or electrical panel. Make sure that moisture cannot enter the enclosure through the drilled holes.

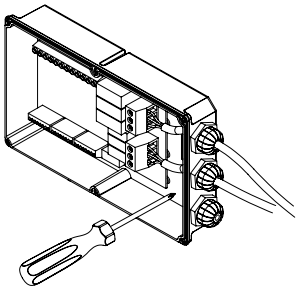

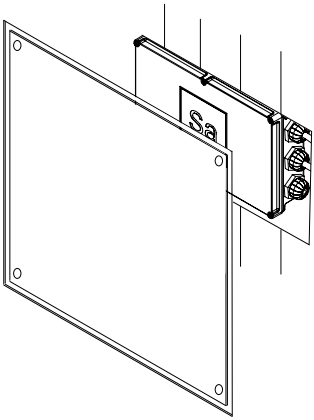

INDICATORS

When an icon or text appears in **red,** it indicates that the user **can interact** with it. When it appears in **white,** it represents a **fixed value** that is **not interactive.** For status indicators, the colour shows the current operating or connection status.

Use the plus (**+**) and minus (**–**) buttons to increase or decrease the selected value.

Changes are saved using the **right arrow** at the top of the screen, while the **left arrow** discards the changes and returns to the previous screen.

In the **"Units"** menu, you can define the default temperature **increment** (1, 5, or 10 degrees) used for temperature adjustment throughout the interface.

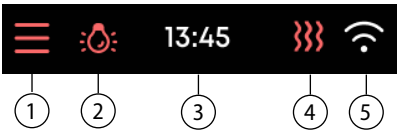

1. **Menu**
2. **Light**
3. **Time**
4. **Heater state**
5. **Wi-Fi connection**

Wi-Fi connection status

Not displayed – No Wi-Fi connection.
White – The connection is operating normally.
Yellow – Connected to Wi-Fi, but there is no internet connection.
Red – Connected to Wi-Fi and the internet, but there is no connection to the Saunum server.

Increase or decrease the selected value

Return without saving

OK / Confirm

Sauna ready time

Temperature

Sauna duration

Fan

Fan speeds

Navigation buttons

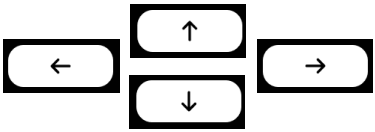

CONTROL PANEL
VIEWS

Language/Region

Imperial/Metric, AM/PM/12h/24h, °F/°C

Connect the control panel to Wi-Fi

Change the date and time settings

View 3

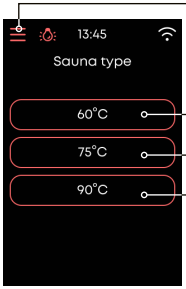

Menu

Preset sauna types in quick selection (see p. 30)

View 1

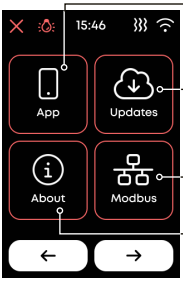

Download and pair with the Saunum app

Software update

Smart home integration information

View the MAC ID and software versions of the control panel, control unit, and connected add-ons

View 4

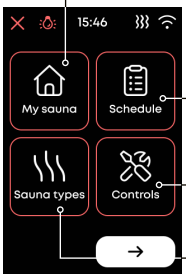

Sauna room and climate device information (see p. 29 "Entering sauna data")

Set automatic sauna ready time and day for sauna session (see pp. 34–35).

Passcode/screen lock

Create up to 3 custom sauna types for quick selection (see p. 30)

View 2

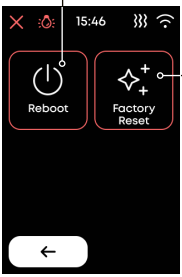

Restart the device – user data will be preserved

Factory reset – all user data will be deleted

View 5

CONTROL PANEL

INITIAL SETUP

Saunum's control unit software is continuously developed to add new features that improve ease of use.

Saunum notifies customers about all updates, and an internet connection is required to download them.

To ensure the automation software stays up to date even if not permanently connected to Wi-Fi, a mobile phone internet hotspot must be used to access and download updates.

During the initial installation of the control system, internet access must be provided, and updates should be downloaded immediately.

1. **When the device is started for the first time, the control panel will display language and region settings.**

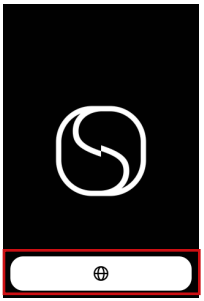

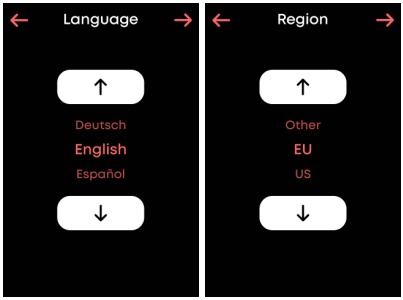

The selected values can be changed at any time in the Language & Region settings.

2. **Connecting to Wi-Fi** (network frequency is 2.4 GHz)**.**

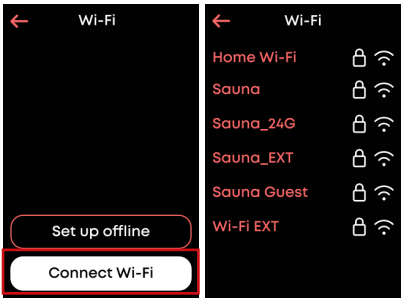

If you do not wish to connect the control panel to a Wi-Fi network, select **"Set up offline".**

NOTE: In offline mode you will not receive software updates, and all settings, including time, date, and measurement units, must be entered manually.

The control panel must be installed in a location with a sufficiently strong Wi-Fi signal.

Check the signal strength at the installation site. Using your mobile phone, follow these steps:

- Turn off mobile data on your phone.
- Turn on Wi-Fi on your phone.
- If the Wi-Fi signal at the installation site is strong and other applications that require data are working, the connection is sufficient.

If the Wi-Fi signal is weak, try the following:

- Test the network connection of the control panel in a different location.
- If possible, relocate the Wi-Fi router to improve the connection to the control panel.

The building structure and materials, particularly metal components, as well as flush mounting of the control panel, may weaken the Wi-Fi signal and reduce connection quality.

Tip! To improve network coverage, you can use a Wi-Fi range extender.

The control panel is designed for controlling Saunum climate devices. To control sauna heaters from other manufacturers, please consult Saunum technical support.

3. **After connecting to Wi-Fi, install all available updates.** This may take several minutes.

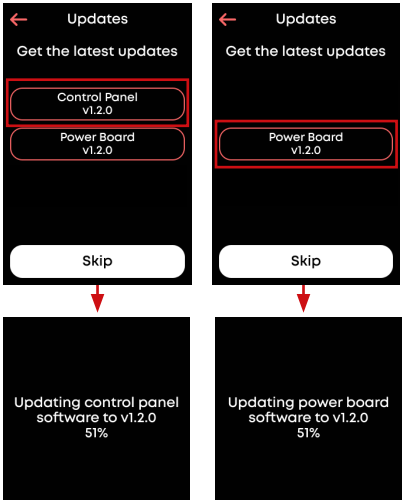

NOTE: The illustration shows the Updates screen **after the initial setup**. Updates appears in red when an update is available and in grey when the device is up to date. You can still update the device manually if necessary.

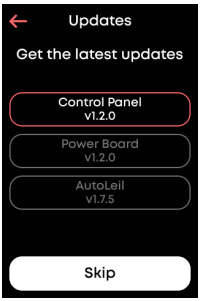

4. Downloading the Saunum app.

With the Saunum app, it is also possible to:

- Set and monitor the sauna temperature.
- Switch on and set the speed for the Saunum sauna climate function.
- See the heater status information.
- Schedule a sauna session.

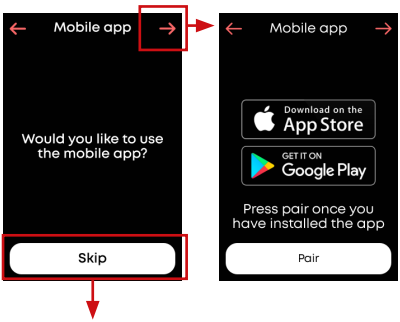

If you do not wish to control the sauna climate device remotely using a mobile device, select "Skip".

5. Opening and downloading the Saunum app.

Select either Google Play or the App Store, scan the QR code shown on the control panel, and download the Saunum app.

Open the app and choose one of the following:

A) Log in to an existing account.

B) Create a new account:

- Enter your email address.
- Enter the verification code sent to your email to complete the registration.

6. Pairing the control panel with a mobile device

To pair the control panel with your mobile device, return to the previous screen and press "Pair". The correct QR code for pairing will then be displayed on the control panel.

Scan the QR code with your mobile device to complete the pairing.

7. Setting units

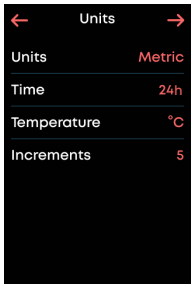

In the "Units" tab, you can set the measurement system to Metric or Imperial, choose the time format (24h or 12h), select the temperature unit (°C or °F), and set the default temperature adjustment step (1, 5, or 10 degrees).

8. Date/Time settings.

Check the Time Region selected during the initial setup. If it is correct for the installation location, leave it unchanged. Then select the appropriate UTC offset manually and enable Auto DST if you want the system to adjust for daylight saving time automatically.

Without Wi-Fi, all settings must be configured manually.

Without Wi-Fi

With Wi-Fi

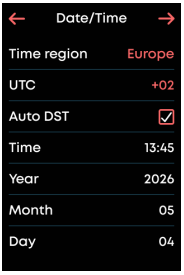

9. Entering sauna data:

Here you can enter the heater type, sauna room size, and total area of the glass surfaces. You can also select whether the sauna is a barrel sauna and whether it has a glass door.

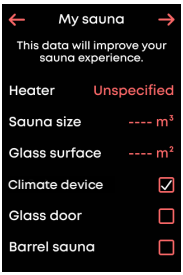

10. Entering sauna data:

Set the size of the sauna room.

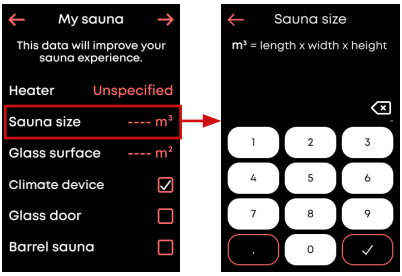

Set the size of the glass surfaces in the sauna room. Glass surfaces affect the heating time, as glass does not retain heat as well as insulated sauna materials.

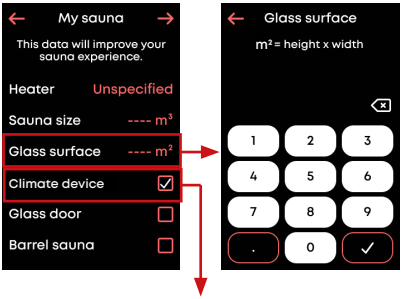

Climate device: Turn this option on if a sauna climate device is installed in your sauna. This enables separate fan controls.

11. Setting passcodes

The control panel provides two types of passcode protection: Admin Lock and Screen Lock.

Admin Lock restricts access to the device configuration settings while allowing normal operation of the sauna climate device.

Screen Lock locks the control panel and prevents any interaction with it until the correct passcode is entered. This helps prevent unauthorized or accidental use of the sauna climate device.

Each lock can be protected with a separate passcode. Passcodes can be changed or removed later in the control panel settings.

If you do not wish to enable passcode protection during the initial setup, press the arrow in the top-right corner to continue.

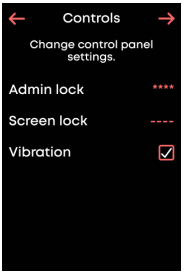

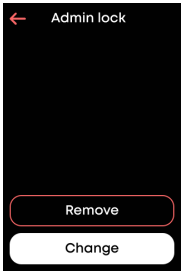

SAUNA **TYPES**

The control panel provides three sauna types for quick access to your preferred sauna settings. Each type includes a name, target temperature, session duration, and fan settings. The fan settings include fan speed and runtime.

During the initial setup, you can customize the sauna types or skip this step and use the default types. You can customize them later at any time.

1. Using the default sauna types

Tap Skip to use the predefined sauna types. Select a sauna type based on the desired target temperature.
You can review and adjust the session settings before starting the sauna.

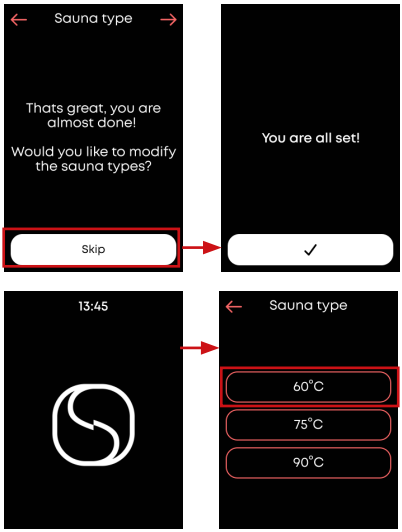

2. Personalizing sauna types

Tap the arrow in the top-right corner to personalize the sauna types. Select one of the predefined types, enter a sauna name, and adjust the target temperature, session duration, fan speed, and fan runtime according to your preferences.

The personalized types can then be selected for future sauna sessions.

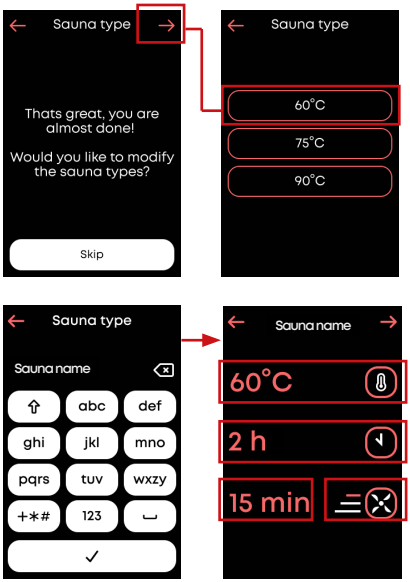

CONTROLLING **YOUR SAUNA** SESSION

WARNING! Do not use the climate function (fan) during the heating phase, as it may prolong the heating time and cause overheating.

Use the sauna climate device (fan) only during a sauna session. The control unit may automatically activate the fan to prevent overheating. Do not leave the fan running unattended.

ADJUSTING SESSION SETTINGS

The control functions allow you to adjust the sauna session settings directly from the control panel.

1. Temperature adjustment

Tap the temperature value to set the desired sauna temperature.

The temperature is adjusted in increments of 1, 5, or 10 degrees, according to the setting selected in the Units menu.

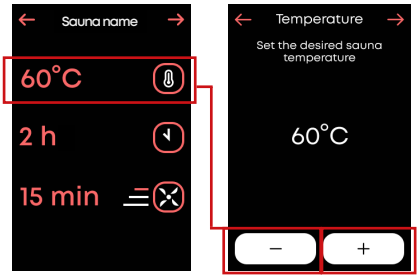

2. Session duration

The session duration covers the **full heater operating cycle**, starting with heating. Allow for the **heating time** when setting it. The duration can be adjusted in 30-minute increments.

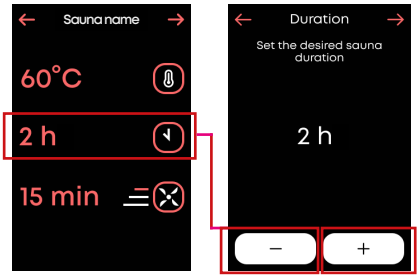

3. Fan speed control

First tap — Preset fan speed
Second tap — Fan speed level 1
Third tap — Fan speed level 2
Fourth tap — Fan speed level 3
Fifth tap — Fan OFF

If the preset fan speed is level 1, the second tap sets the fan speed to level 2.

When the fan is operating, the fan icon is animated to indicate the current fan speed. The higher the fan speed, the faster the animation and the more illuminated bars are displayed.

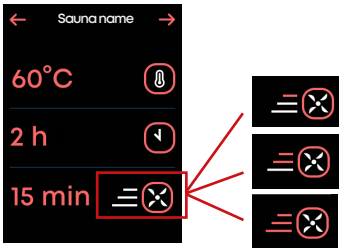

4. Fan runtime

The fan runtime can also be adjusted.

Available runtime settings:

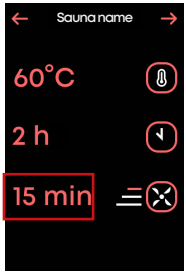

1 minute
2 minutes
3 minutes
5 minutes
10 minutes
15 minutes
20 minutes (maximum)

HEATING

After selecting one of the three available sauna types, a new window will open where you can choose when the sauna should be ready. The time can be adjusted in 15-minute increments.

The selected temperature is also displayed and can be adjusted using the temperature increment selected earlier in the **Units** section (see p. 28). When everything is set, press **Start** to begin.

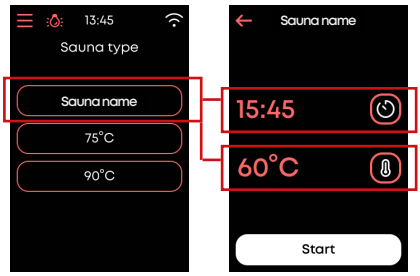

Sauna heating will start, and the screen will display the current sauna room temperature, target temperature and the estimated time until the sauna is ready.

During the heating stage, the heating algorithm may automatically switch between heating elements or use only one heating element at a time. This is part of normal operation.

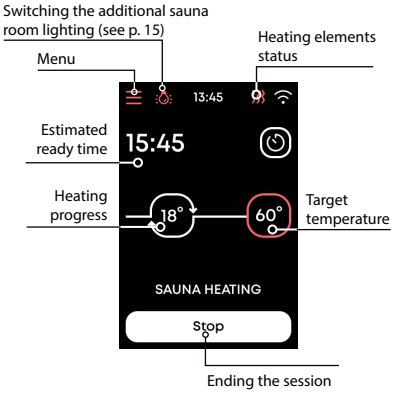

When the desired target temperature is reached, the "Ready" screen will appear.

After the sauna session has begun, you can adjust the temperature and fan speed.

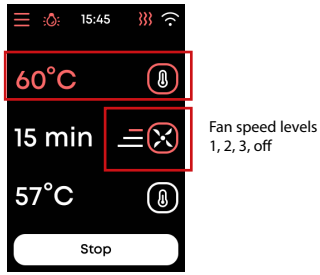

COOLING

This screen appears after the sauna session and shows the temperature inside the sauna as it falls. During cooling, you can use the fan to stay a little longer and throw water on the still-hot stones 1–2 more times.

The Cooling view remains active for 60 minutes, or longer if the temperature has not fallen below 50 °C. You can dismiss it manually.

By default, the fan runtime follows the sauna session setting. In the Cooling view, you can change it to 30, 45, or 60 minutes before starting the fan or while it runs. You can also control the fan and dismiss the view from the mobile app.

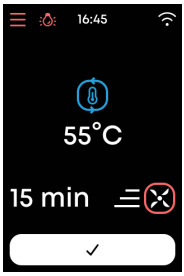

SAUNA **SCHEDULING**

The control panel allows you to schedule a sauna session.

Before setting up a scheduled sauna session, make sure there are no foreign objects on the sauna climate device's stones or within its permitted safety distance.

The safety distances are provided in the user manuals for the sauna climate device models.

Heating will not start if the sauna room door is open at the scheduled time.

1. Open menu "Schedule"

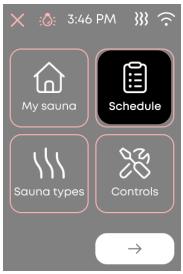

2. Add new

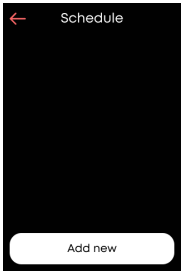

3. Change the "Type", "Day", and "Repeat" settings.

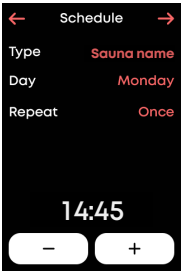

3.1. Setting the sauna type.

Select a suitable preset sauna type (see pp. 30–31) for the desired day and time. If no custom sauna types have been created, you can choose one of the preconfigured types: "140 °F / 60 °C", "167 °F / 75 °C", or "194 °F / 90 °C".

The target temperature corresponds to the selected preset, and the default duration is 2 hours.

3.2. Selecting the day.

Select the desired day for the sauna session.

3.3. Repeating the sauna session.

Choose whether you want to repeat the same sauna session daily, weekly, or once.

3.4. Setting the time.

Set when you want the sauna to be ready. The start time can be adjusted in 15-minute increments.

You can add up to 10 schedules.

Once you have paired the control panel with your mobile device (see p. 28), the mobile app will notify you shortly before the scheduled heating begins.

To cancel the scheduled heating, select "Cancel". Otherwise, heating will start as scheduled.

USING THE **AIR BUTTON**

Press the Air Button once to start the fan at the preset speed configured for the selected sauna type on the control panel. Each subsequent press cycles through the remaining fan speeds and Fan Off, then returns to the preset speed. Depending on the preset speed, the cycle consists of four or five button presses.

The button LED indicates the selected fan level:

- Level 1: LED flashes once.
- Level 2: LED flashes twice.
- Level 3: LED flashes three times.

After indicating the selected level, the LED turns off while the fan is running. When the fan is off, the LED remains illuminated. If the fan function is unavailable, the button LED flashes five times.

WARRANTY
CONDITIONS

The Saunum warranty starts from the date of purchase and includes all manufacturer-provided parts of the control unit. The warranty covers manufacturing and material defects. Under this warranty, Saunum will provide replacement parts to the buyer, but only after the faulty parts have been returned to the manufacturer or reseller. Replacement of any part in the control unit by Saunum does not extend the original warranty period.

The electrical device should only be connected to the power and/or utilities in accordance with all laws and regulations by a licensed, certified electrician.

The warranty applies only to the first installation of the product and to the original purchaser.

- The warranty is only valid if a completed installation report is submitted with the claim;
- The device is connected to the power and/or utilities in accordance with all laws and regulations by a licensed, certified electrician;
- A warranty period of two (2) years applies to the Device if it is used in a private sauna;
- A warranty period of one (1) year applies to the Device if it is used in a public sauna.

The warranty does not cover:

- Routine maintenance and cleaning of the device, and replacement of the components due to normal wear and tear;
- Adaptation or modification of the device for any purpose other than that indicated in the instructions for use;
- Risks arising from transport;
- Damage resulting from misuse;
- Damage resulting from the improper installation of the device;
- Repairs to the device not carried out by Saunum's recommended repair and maintenance partner;
- Accidents, lightning, water, fire, improper ventilation, or any other factor beyond the control of Saunum.

Read all of the instructions for use carefully and thoroughly before using the device and keep them in a safe and easily accessible place.

INSTALLATION **REPORT**

Saunum sauna's control unit model: _____

Date of purchase: _____

Original purchaser: _____

Place of installation: _____

Purchased from: _____

Date of electrical installation: _____

Signature of the installer: _____

Notes: _____

Customer's contact (name, email address): _____

Work accepted: _____

Start date of warranty: _____

You can find the list of Saunum Saunas OÜ's recommended installation and maintenance professionals on the Saunum Saunas OÜ website **www.saunum.com** or by contacting us at **info@saunum.com**

Please note! The control unit may only be connected to the power network by a qualified electrician in accordance with the regulations in force.

EC declaration of conformity

Manufacturer: Saunum Saunas OÜ

certifies that the product:

Saunum sauna control unit AirIQ

complies with the requirements of the following directives of the European Parliament and of the Council, provided that the installation has been carried out in accordance with the installation instructions issued by the equipment manufacturer and EN 60204-1 "Safety of machinery. Electrical equipment for the machinery – Part 1: General requirements":
Machinery Directive 2006/42/EC
Low Voltage Directive 2014/35/EU
Electromagnetic Compatibility Directive 2014/30/EU.