ENG

Patented Technology
MADE IN ESTONIA

INSTRUCTION FOR USE AND INSTALLATION

saunum

Saunum Air L

Sauna heater with climate device

V_26_10.1

THE BEST
SAUNA EXPERIENCE

I am very glad that you have invested in the Saunum device, and I believe that our innovative technology will offer you a wonderful and extraordinary sauna experience.

I have a degree in thermal engineering and come from the Southern Estonia, where my love for saunas began. The special feature of local historic smoke saunas is the lower temperature and higher humidity level than, for example, a classic Finnish sauna. In ordinary saunas, the stone volume of the sauna heater is generally small. Such an arrangement can cause a sudden, burning hot steam and an extremely uneven temperature, where your head and shoulder level is really hot, but your feet are left cold. Such an experience can be quite unpleasant and may cause headaches and lead to body stress. However, in ancient smoke saunas and Native American saunas, the stones were first heated during the day. Then the heat stored in the stones was used to cleanse the body and create a truly enjoyable sauna experience.

Inspired by the experience of a smoke sauna, I wanted to create an innovative solution that combines the best features of an authentic sauna with modern technology; enabling a pleasantly mild and relaxing sauna experience without painfully scorching steam. For that, however, I had to solve the problem of how to achieve an even temperature, at both the head and foot levels. My development work was supported by research done alongside Tallinn University of Technology in

which we analyzed the thermal stratifi cation and air movement in the sauna room. Saunum was born in cooperation between scientific thinking and technological innovation.

Saunum's unique patented mixing system of air layers captures the hot steam that rises under the ceiling of the sauna room, mixes it with the cooler air from the surface of the floor, and directs the milder steam back evenly. This makes for an enjoyable, unaggressive heat. You can sit in the sauna for a longer time, and enjoy a sweat and a deep cleanse without feeling tired. The stone volume of our heaters is significantly larger than most widely used sauna heaters, which is the reason for the especially pleasant indoor climate with long and soft steam.

A moist steamy sauna, a therapeutic salt sauna, or a healthy aroma sauna – all of these functions are available on Saunum's devices to create a truly relaxing sauna experience. When using Himalayan salt spheres in our device, salt ions that are beneficial to skin and respiratory tract evaporate and the steam circulates these into the air. Adding a sauna aroma system that blends steam and healthy aroma oil creates an even more enjoyable sauna environment.

Saunum's sauna devices are suitable for both adults and children.

Have a pleasant sauna!

Andrus Vare
The creator of Saunum

CONTENTS

Product completeness 8
Parts of the device 9
Working principle 10

BEFORE THE INSTALLATION

Heater sizing 12 - 13
Sauna sizing and heater selection 14
Sauna room ventilation 15 - 17

INSTALLATION

Safety information 18 - 19
Safety distances 20 - 21
Electrical connections 22 - 27
Installation instructions 28 - 31
Control panel 32
Door sensor 33
Air Button 34 - 35
Temperature sensor 36 - 37
Loading stones 38

DIRECTION FOR USE

Warnings 39
Heating the sauna room 40
Using the sauna climate device 41
Adjusting the temperature 41
Use of Himalayan salt 42
Ladling water on the heater 42 - 43

Maintenance 44 - 45
Solving problems 46 - 47
Thermal cutoff 48
Element replacment 49
Warranty 50
Installation report 51

Read all of the instructions for use carefully and thoroughly **before using the device** and keep them in a safe and easily accessible place for future reference.

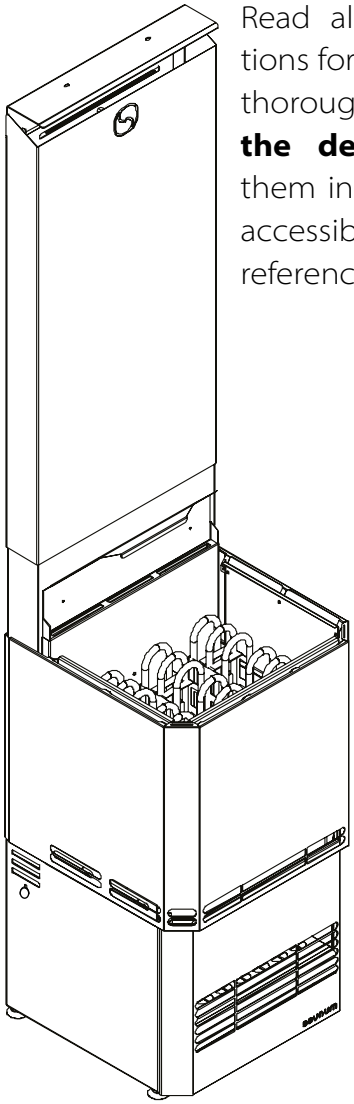

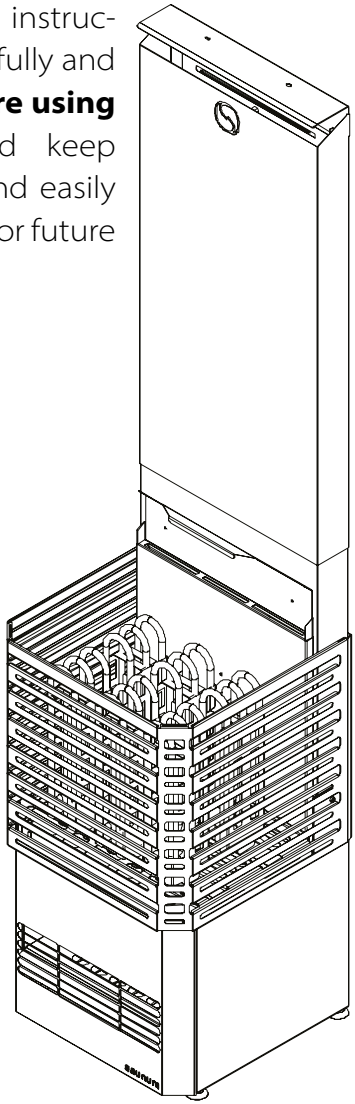

Saunum **congratulates you** on choosing a heater with an innovative sauna room indoor climate device!

HOW TO USE SAUNA

Enjoying sauna has a relaxing effect. It should never be a source of stress. The best sauna experience is individual. While using the sauna, it is recommended to wear as little clothing as you feel comfortable with.

Enter the sauna room when it has reached your target temperature (see page 40). When the sauna has reached the target temperature, use a dedicated sauna ladle with hot water – around 150–200 ml at once – by pouring it on the hot stones (see page 42). Always use hot water – cold water will fragment the stones more quickly.

You can also install an automatic water spraying system, such as the Saunum AutoLeil. This will raise the humidity in the sauna room and create stronger sensations of heat.

When using the Saunum climate device, use the ventilation mode to distribute steam evenly between the upper and lower layers of the room. Proper ventilation is an essential part of a comfortable sauna experience: fresh air improves breathing comfort and prevents the sauna from becoming stuffy. Make sure that the intake and exhaust openings are not blocked.

By using the Saunum AirIQ control panel, you can always pre-set or manually change temperature, humidity (by throwing water on hot stones) and Saunum climate device fan speed to find best settings you enjoy the most.

These installation and operating instructions are intended for the sauna owner, maintenance personnel, and the electrician responsible for installing the **Saunum Air L** heater with a built-in climate device (hereinafter **"heater", "device"**).

Package Contents:

The standard Saunum Air L package includes the heater with heating elements and Himalayan salt spheres.

All components required for operation and control must be purchased separately.

AirIQ control unit (sold separately) includes:

- Power board,
- Control panel,
- Air Button,
- Door sensor with cable,
- Temperature sensor,
- Temperature sensor, Air Button and control panel connection cables.

Additional accessories available:

- AutoLeil (includes 1 button),
- AutoLeil Button (for installations requiring more than one button),
- Protective air deflector

Lighting is not included in the package and is not supplied by Saunum.

All connection options are shown in the wiring diagram on **page 25**.

After installation, the instructions must be handed over to the owner or maintenance provider.

Before using the heater, carefully read the installation and safety instructions.

The Saunum Air L is intended for heating the sauna room at 60–100 °C and for leveling the sauna room climate during steaming.

Please note! The heater with the climate device must not be operated in temperatures exceeding 100 °C!

Do not use the Saunum Air L for any other purposes!

The installer is responsible for verifying compliance with local building codes and structural requirements.

NOTE: To ensure the longevity of the device, make sure that the temperature of the sauna room at the height of the lower part of the device does not exceed 80 °C. If it is exceeded, the thermal protection will be applied and the fan will stop; the fan will start running again if the temperature drops below the fuse limit of application.

The manufacturer is not responsible for any malfunction caused by an overrun of the authorized operating temperature.

Saunum Air L is designed to operate exclusively with the Saunum AirIQ control unit.

PRODUCT **COMPLETENESS**

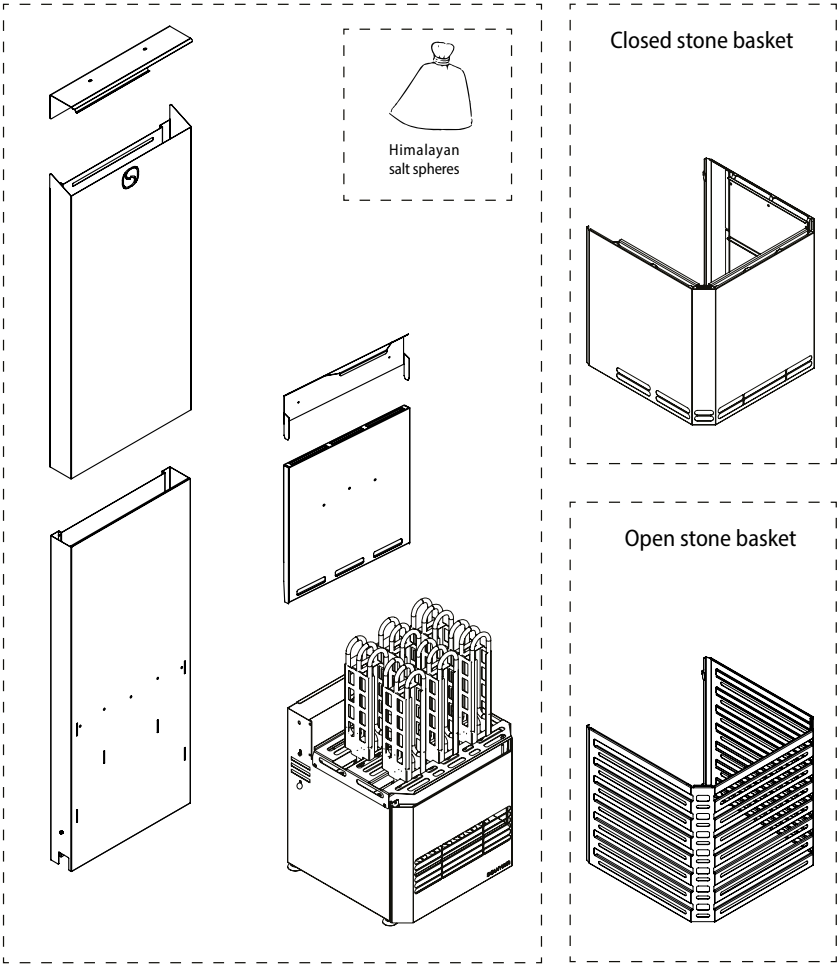

The following components are required for operation, but are not included in the scope of delivery: AirIQ control unit, power cables, and stones.

PARTS OF THE DEVICE

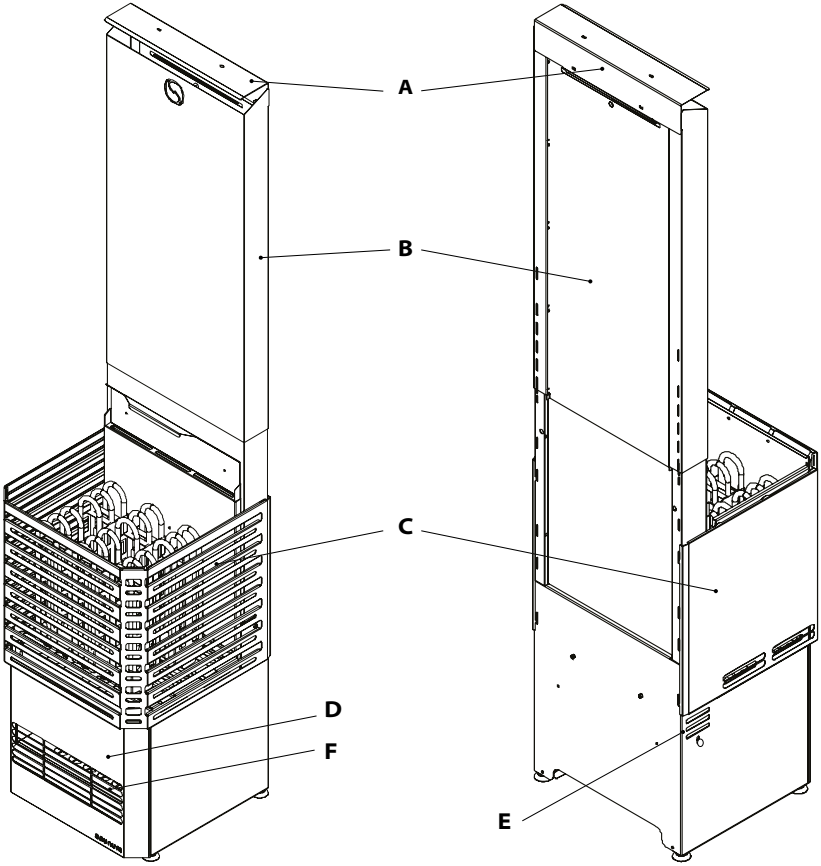

A - Flue cap
B - Telescopic flue
C - Stone basket
D - Front panel
E - Steam air cooling damper
F - Himalayan salt tray

Remove the protective film before assembling the heater!

WORKING PRINCIPLE

The image below shows the operation of the Saunum heater during heating, with the target temperature range of 80–90 °C and the fan turned off. When water is poured onto the hot stones in a traditional sauna, the resulting steam rises to the upper layers of the sauna room, creating a harsh heat layer under the ceiling

The image below shows the operation of the Saunum heater with the fan running. The device is designed so that when water is poured onto the stones, the fan distributes the resulting steam evenly throughout the sauna room, ensuring a balanced and enjoyable sauna experience.

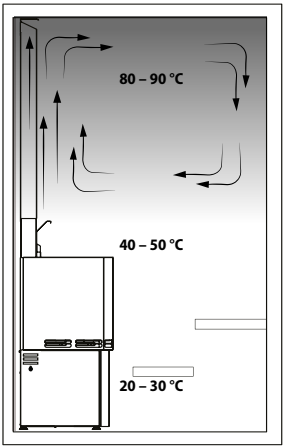

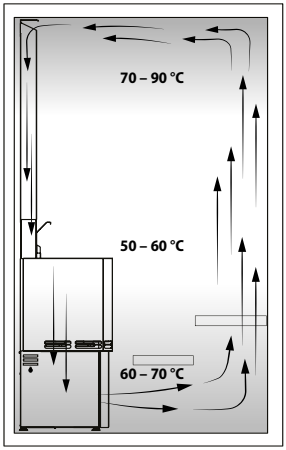

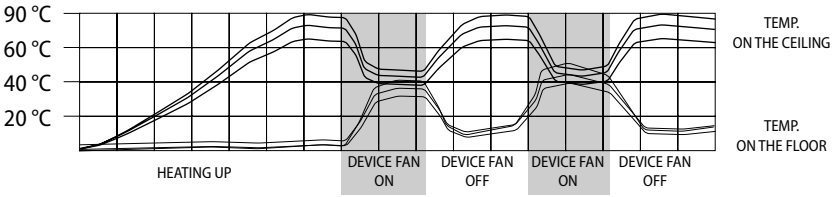

BEFORE THE **INSTALLATION**

The installation of the heater must be performed by a qualified electrician in accordance with local electrical and building regulations.

The connection of the device must be carried out in a stable location using a cable suitable for the ambient temperature conditions.

Protective earthing (PE) must be connected to the earthing terminal of the device, and the cross-sectional area of the cable must be at least 2.5 mm^2.

The device must be powered from the control unit's supply circuit, which is protected by over-current fuses.

The required fuse ratings and connection cable dimensions are given in **Table 1 (see pages 18–19)**.

Use of any other control unit is not permitted.

Before starting the installation work, read the installation instructions and observe the following:

- The power and type of the heater are suitable for the given sauna room. The recommended sauna room volume is given in **Table 1 (see pages 18–19)**.
- The supply voltage is suitable for the Saunum Air L.
- At the installation site of the Saunum Air L, the minimum safety distances given in **Table 1 (see pages 18–19)**, measured from the heater housing, are guaranteed.
- The dimensions of the device are shown in **Figures 1 (see pages 12-13)**.
- It must also be ensured that the upper edge of the fan outlet of the heater is lower than the lower edge of the bench.
- There must be no obstructions in front of the air outlet from the device, the exhaust air flow must be able to flow freely across the sauna room.
- The device works most efficiently when its flue cap is installed against the ceiling of the sauna room and the exhaust air is blown under the bench.
- Safety distances must be complied with unconditionally, as failure to do so may result in a fire hazard.

Saunum Air L
9kW, 12kW and 15kW
(Closed stone basket)

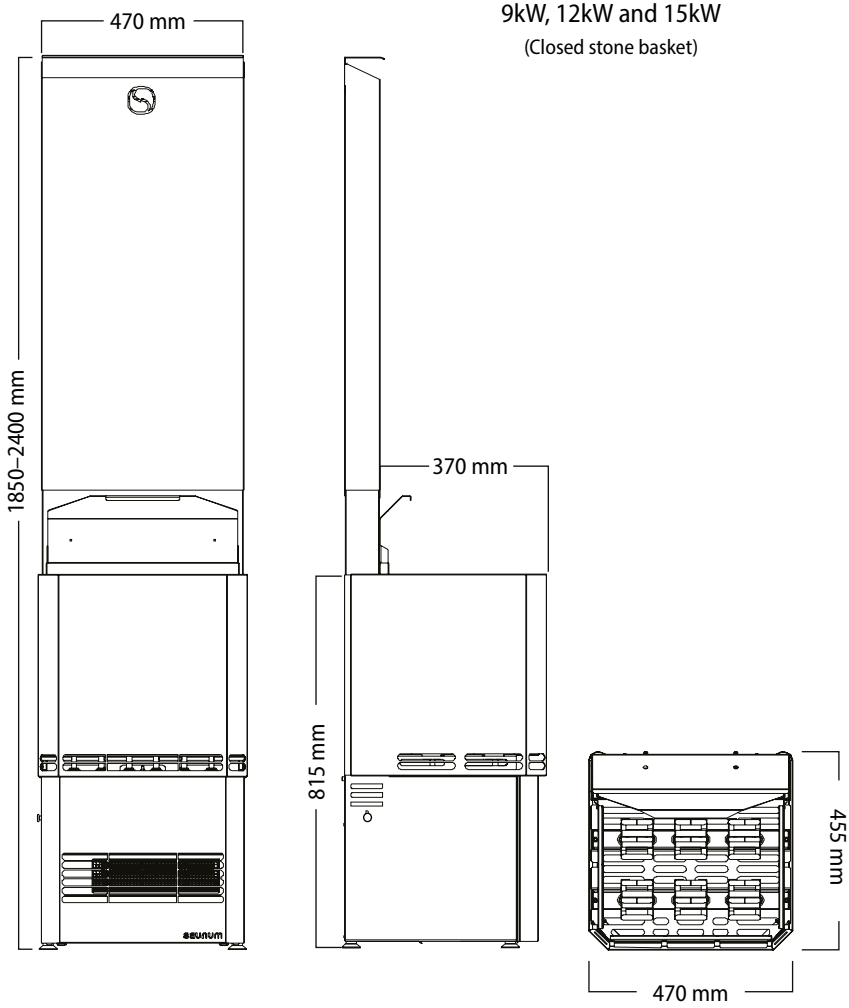

Figures 1

Saunum Air L

9kW, 12kW and 15kW

(Open stone basket)

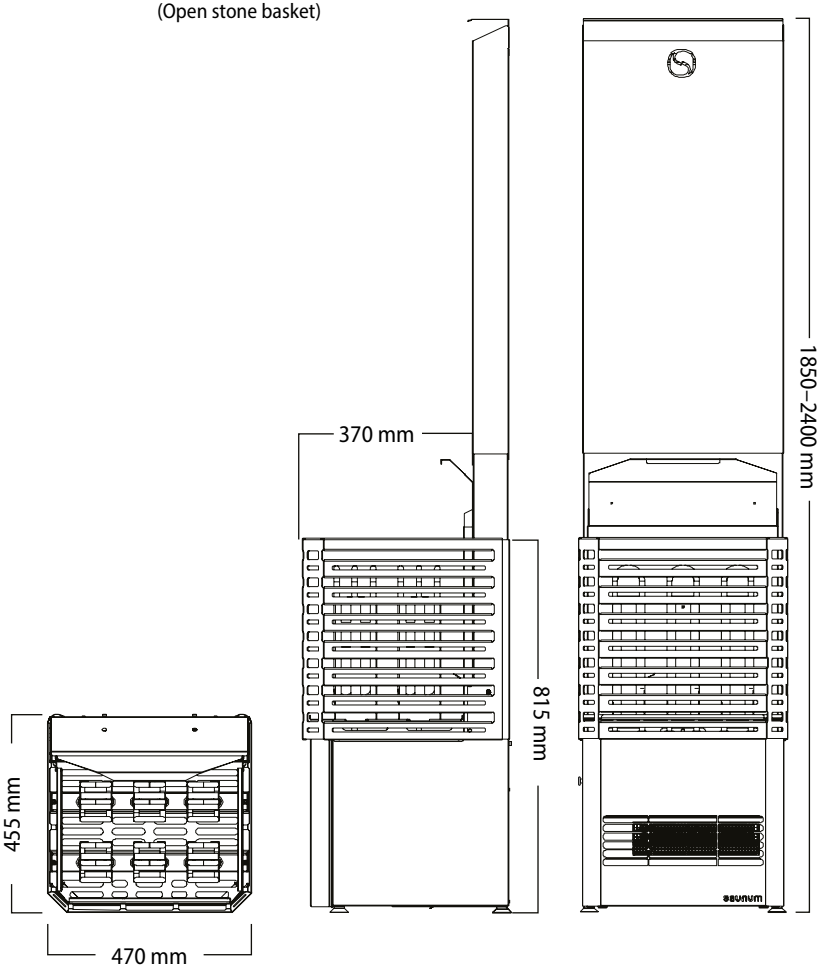

SAUNA SIZING AND **HEATER** SELECTION

Proper heater performance depends not only on the sauna room's volume, but also on how the room is constructed and insulated. This section explains how to prepare the sauna space and how to calculate the correct heater size for optimal operation and comfort.

Preparing the Sauna Room

Before installing the heater, the sauna must be properly insulated and prepared.

Poorly insulated walls and ceilings can result in long heating times and energy inefficiency.

Note: The minimum room height required for the Saunum Air L unit is listed in Table 1 (pages 18–19).

Follow the steps below to determine the correct heater power for your sauna room:

1. Measure the Room Volume

Calculate the basic sauna volume:
Y (length) × X (width) × Z (height) (in meters)
Result is the base volume in cubic metres (m^3)

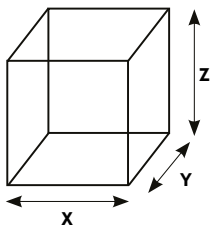

Figure 2

2. Adjust for Non-Insulated Wood Construction

If the sauna is constructed from logs, planks, or staves (without internal insulation),
Multiply the base volume by **1.5**
This accounts for additional heat loss through uninsulated wood surfaces.

3. Adjust for Cold Surfaces

For any cold surface materials such as glass, tile, brick, concrete, or stone add **1.2 m^3** to the total volume per 1 m^2 of such material.

Example:
A glass door of 1.5 m^2
$1.5 \times 1.2 = 1.8$ m^3
Add this to the sauna volume.

4. Determine Total Sauna Volume

Add all adjustments to your base volume. This is the final volume to be used for heater selection.

5. Choose the Heater Size

Use the final sauna volume to select the correct heater model.

If your volume falls between two heater sizes, choose the larger one for better heat-up time, efficiency, and temperature stability.

Example Calculation:

A sauna room has dimensions:
Length = 2 m, Width = 2 m, Height = 2.4 m
$2 \times 2 \times 2.4 = 9.6$ m^3
There is a glass door of 1.5 m^2
$1.5 \times 1.2 = 1.8$ m^3
Total volume = 9.6 + 1.8 = 11.4 m^3
Choose a heater rated for at least 11.4 m^3

SAUNA ROOM
VENTILATION

This ventilation setup allows Saunum technology to operate at its full potential.

When installing the heater, make sure the **Air Intake** is positioned close to the heater's air inlet.

Natural or with **mechanical** extraction:

The **intake opening** should be located no **higher than 300 mm from the floor**.

The **air intake pipe** should have a diameter of approximately **100 mm**, providing an approximate cross-sectional area of **78.5 cm²**.

The **air extraction pipe** should have a diameter of approximately **150–200 mm**, providing a cross-sectional area of approximately **180–320 cm²**.

Extraction vents should be installed as far as possible from the heater, at a height of no less than 600 mm and no more than 1200 mm from the floor.

For **mechanical** ventilation:

As an option, a **ceiling-mounted auxiliary air intake** may be installed. This intake does not replace the main air intake located near the heater. The ceiling-mounted intake must be equipped with a check valve to prevent backflow. A fan may be used to supply fresh air through this intake if required.

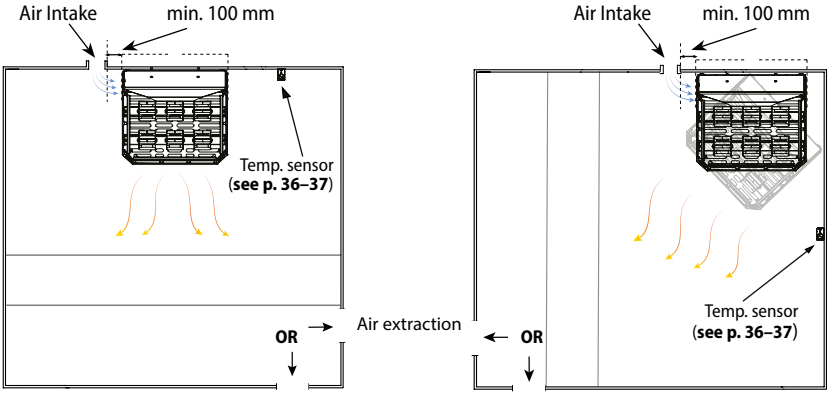

Figure 3 **Figure 4**

Recommended ventilation configurations for optimal air circulation in the sauna room.

Optimal placement of ventilation openings for **mechanical ventilation**:

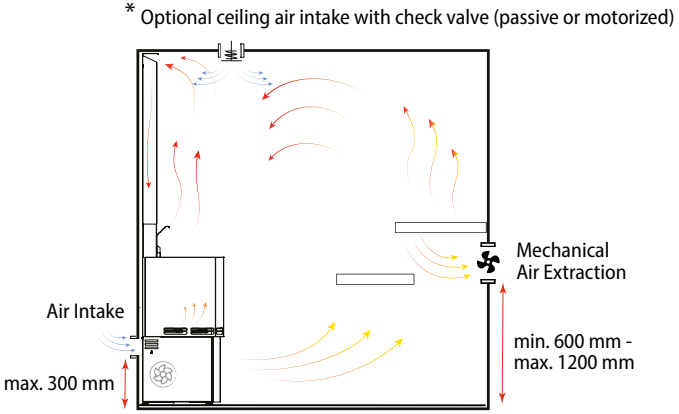

Figure 5

Optimal placement of ventilation openings for **natural ventilation**:

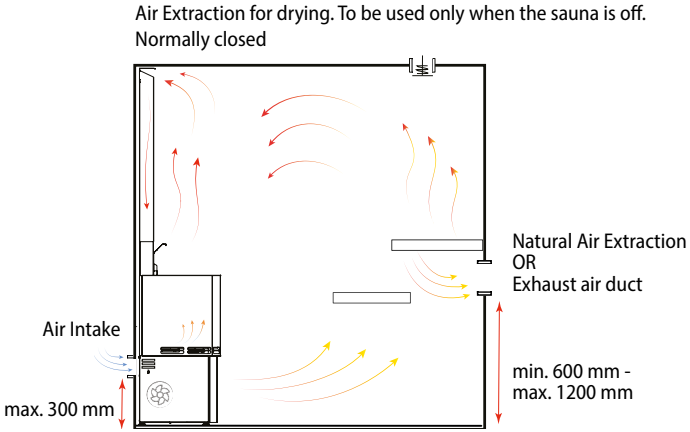

Figure 6

The air in the sauna room must be changed at least six times an hour.

Air intake ventilation in a sauna room is mandatory.

Install the air intake vent under or next to the heater. The **air intake pipe** must have a diameter of about **100 mm.**

Air output ventilation in the sauna room is mandatory.

Install the air extraction higher than intake and as far as possible from the heater.

The **air output pipe** must be twice the diameter of the air intake pipe (approximately **150–200 mm**).

Incorrect ventilation layout.

In this setup, the exhaust openings are positioned lower than the intake, and the ceiling vent remains open without a check valve.

This configuration disrupts proper warm air circulation and causes excessive heat loss, reducing the sauna's efficiency.

Do not install ventilation this way — it is ineffective and should be avoided!

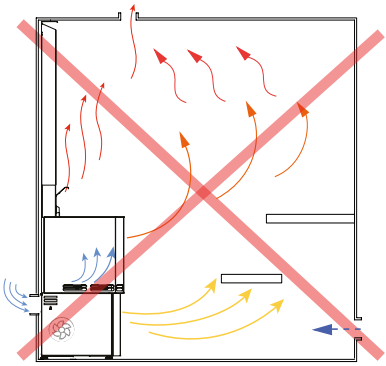

Table 1

DEVICE (230V 3N~ 50/60Hz)	WATTAGE	3 phase PROTECTION
Saunum Air L – 9	9000 W	C16
Saunum Air L – 12	12000 W	C20
Saunum Air L – 15	15000 W	C25

Do not connect the heater to the power and/or utilities via a GFCI breaker!

DEVICE	ROOM SIZE	MIN. CEILING HEIGHT
Saunum Air L – 9 (open stone basket)	8-14 m^3	1850 mm
Saunum Air L – 12 (open stone basket)	12-16 m^3	1850 mm
Saunum Air L – 15 (open stone basket)	15-23 m^3	1850 mm
Saunum Air L – 9 (closed stone basket)	8-14 m^3	1850 mm
Saunum Air L – 12 (closed stone basket)	12-16 m^3	1850 mm
Saunum Air L – 15 (closed stone basket)	15-23 m^3	1850 mm

POWER CABLE mm² 3 phase	POWER CABLE mm² from power board to fan
5 x 4.0	5 x 1.5
5 x 4.0	5 x 1.5
5 x 4.0	5 x 1.5

Min 125 ºC copper wiring

MINIMUM SAFE DISTANCE FROM THE HEATER TO CEILING	MIN. SAFE DISTANCE FROM THE HEATER
1035 mm	A: 203 mm from sides & B: 254 mm from the front side
1035 mm	A: 203 mm from sides & B: 254 mm from the front side
1035 mm	A: 203 mm from sides & B: 254 mm from the front side
1035 mm	A: 50 mm from sides & B: 50 mm from the front side
1035 mm	A: 50 mm from sides & B: 50 mm from the front side
1035 mm	A: 50 mm from sides & B: 50 mm from the front side

SAFETY DISTANCES

Safety distances depend on the type of stone basket and apply to combustible materials (e.g. wood, paper, textiles, etc.).

Saunum Air L with closed basket - 50 mm A and B dimensions.

Saunum Air L with open basket - 203 mm A and 254 mm B dimensions.

NB! Only the rear side of the device may be installed directly against the sauna room wall or ceiling panels.

If the device is installed into a recess (niche) in the wall, the niche depth must not exceed **102 mm**.

If, in a niche installation, the lateral safety distance **A** is less than **50 mm/203** mm, the surrounding structure must be made of noncombustible material (Figure 7).

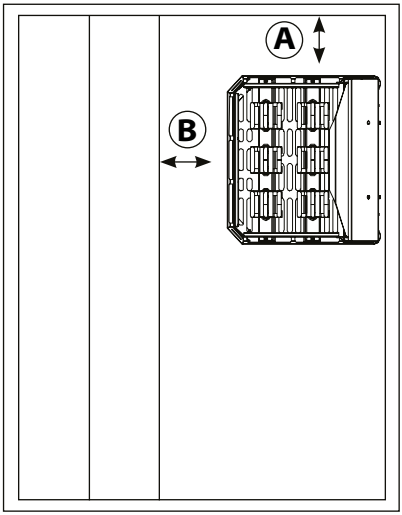

Figure 9

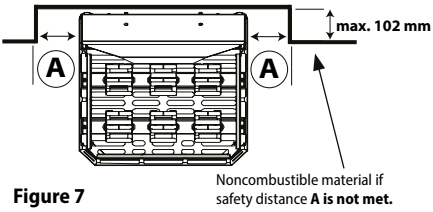

Figure 7

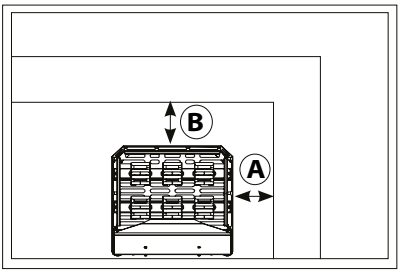

Figure 8

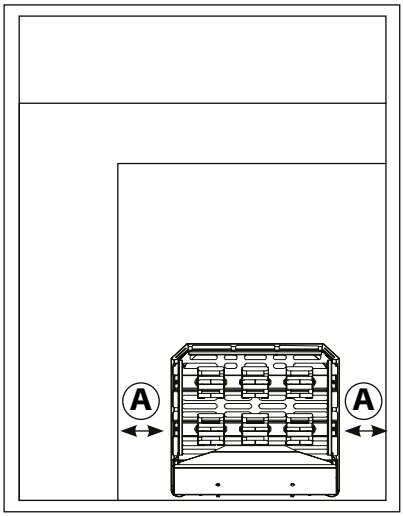

Figure 10

SAFETY DISTANCES

Do not place your feet or any other part of your body closer than 500 mm in front of the air outlet while the fan is operating!

Please keep children at least 1000 mm away if the fan is operating — sauna steam may cause skin burns!

Do not allow pets in the sauna room while the device is operating!

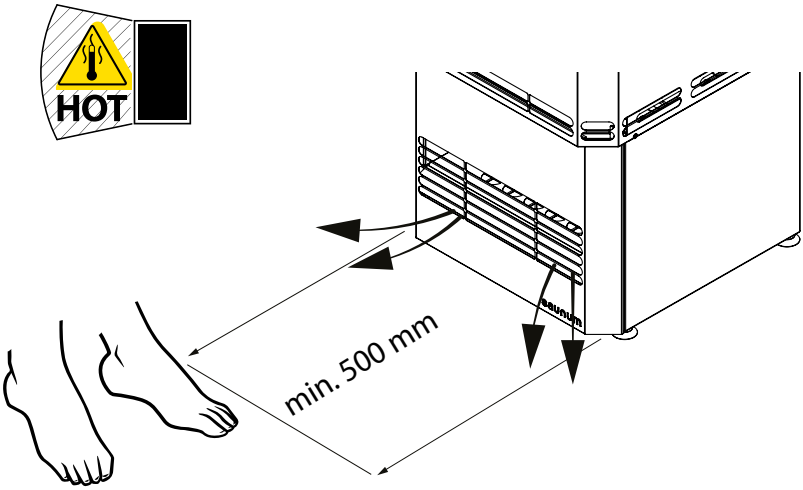

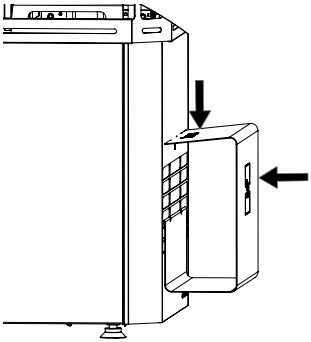

A protective air deflector is available as an **optional accessory** and can be attached to the front of the device.

ELECTRICAL
CONNECTIONS

Connect the heater to the control unit.

The electrical connection of the device must be performed by a qualified person in accordance with the applicable standards and requirements.

The heater must be connected semi-permanently to the junction box on the sauna room wall.

The junction box must be splashproof and its maximum height from the floor can be up to 500 mm.

The connection cable must be a rubber insulated type H07RN-F cable or equivalent. To access the device electrical connections, it is necessary to open the bottom panel.

To open the panel, completely loosen the two bolts behind the front grille (see figure below).

NB! Due to the potential danger of thermal embrittlement, it is forbidden to use a PVC-insulated cable as the connection cable for the heater.

Saunum supplies the cables for the AutoLeil, control panel, Air Button, and temperature sensor.

The fan and heater power cables are not included and must be supplied by the customer. Cable colors may vary by manufacturer, and the cable must comply with the applicable standards.

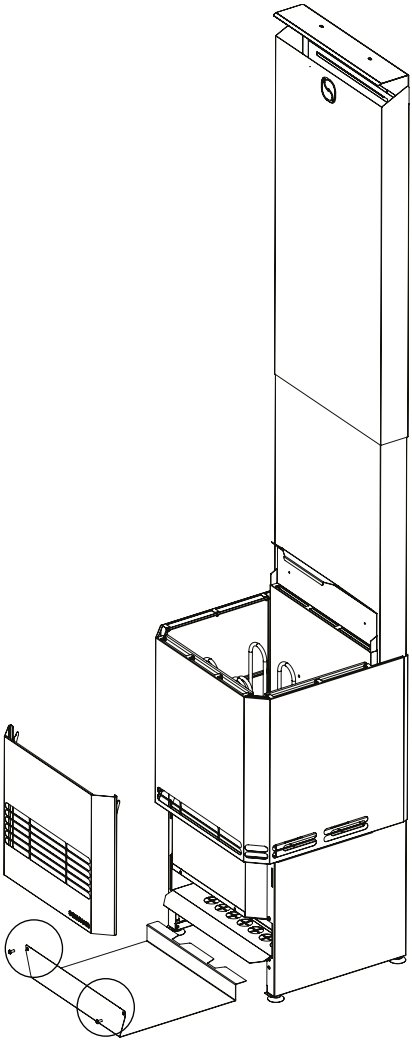

- The internal connections of the device are made by means of screw terminals according to **Figure 11-12 (see page 24-25)** and **Table 1 (see pages 18–19)** in this manual.
- Protective earthing (PE) must be connected to the connection terminal of the device, with the cross-sectional area of the cable being at least 2.5 mm^2.
- The heater must be powered from the 230 VAC (3-phase) or 230 VAC (1-phase) 50/60 Hz supply circuit through a control unit protected by an over-current fuse of the size shown in **Table 1 (see pages 18–19)**.
- Use earthed cables with a conductor cross-section of at least 1.5 mm^2 for powering the fan.
- The power cable must enter the housing of the heater in such a way that water cannot run along the cable into the electrical connection area of the device. The outer insulation of the cable may be removed only from the section inside the device housing.
- If the connecting and installation cables are located higher than 1000 mm from the floor of the sauna room or inside the walls of the sauna room, they must be able to withstand a temperature at least 125 °C (e.g., SSJ). Electrical equipment installed in the steam room below 1000 mm must withstand a temperature of at least 90 °C (e.g., T125).
- The recommended cross-section of the connection cable grooves is given in **Table 1 (see pages 18–19)**.

NB! The heater may only be connected by a professional electrician in accordance with the applicable regulations!

ELECTRIC HEATER
INSULATION RESISTANCE

During the final inspection of the electrical installation, a leakage may be detected when measuring the insulation resistance of the heater, and which has occurred due to the insulation material of the heating elements absorbing moisture from the air (storage, transport). After a few uses of the heater, this moisture will disappear.

Do not connect the heater through a GFCI (Ground Fault Circuit Interrupter) breaker, as it may cause unwanted tripping during normal heater operation.

ELECTRICAL CONNECTION

Figure 11

NB! Connection is permitted only through the control unit!

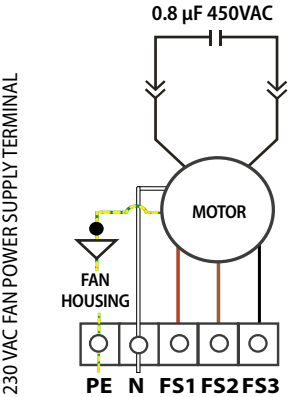

NB! Connection is permitted only through the control unit! Do not connect through a residual-current device!

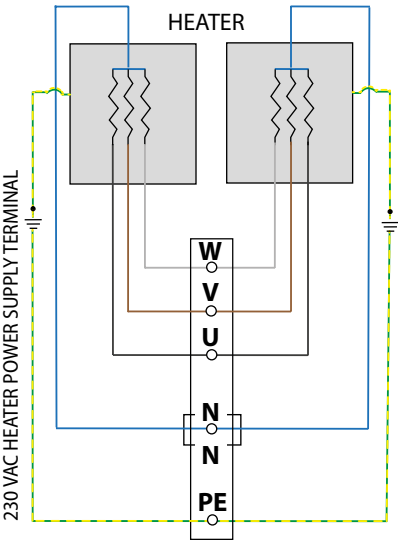

Figure 12

Connecting the heater to the control unit power board.

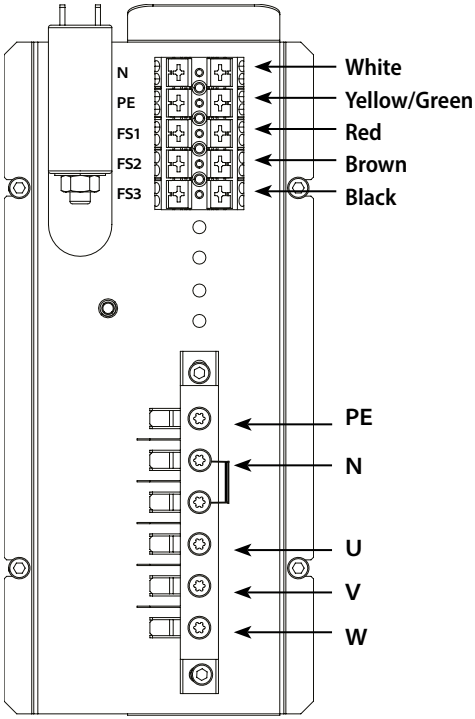

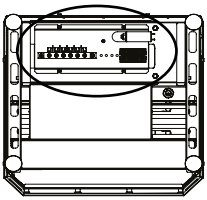

Heaters up to 12 kW can be connected directly to the control unit. Heaters above 12 kW must be connected through a contactor.

Connecting to the control unit. **Figure 13**

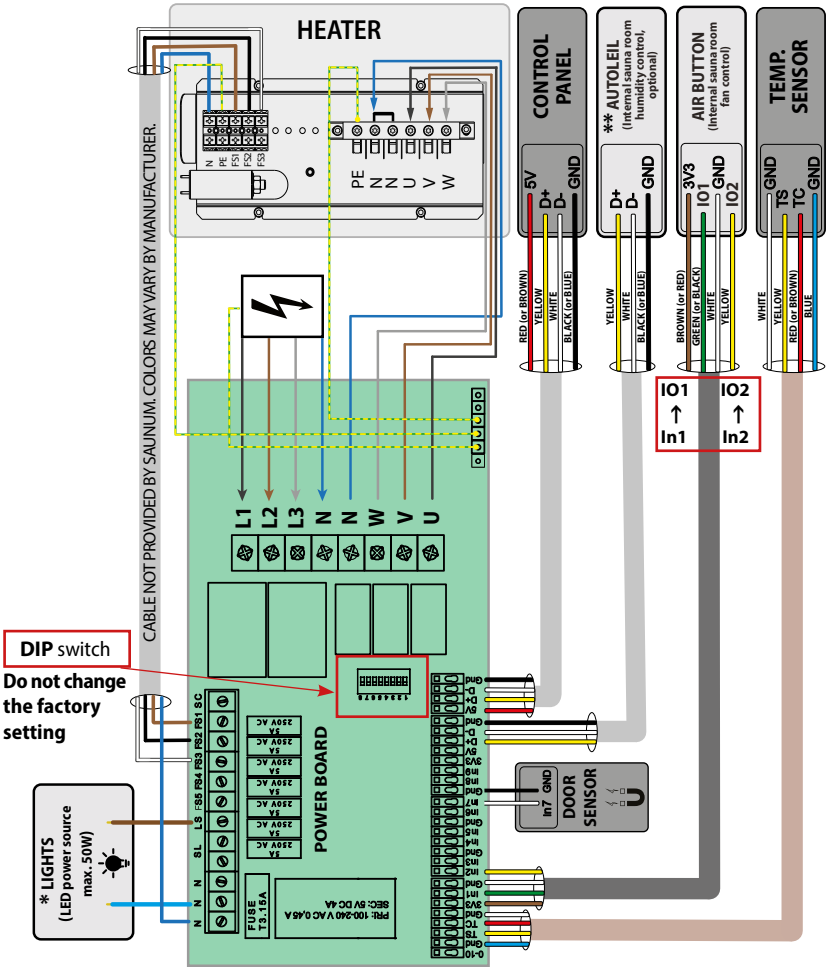

* The power supply for the LED lights (max 50 W) must be equipped with an inrush current limiter (not included).

** AutoLeil is sold separately

ELECTRICAL CONNECTION

Saunum Air L 9kW, 12kW

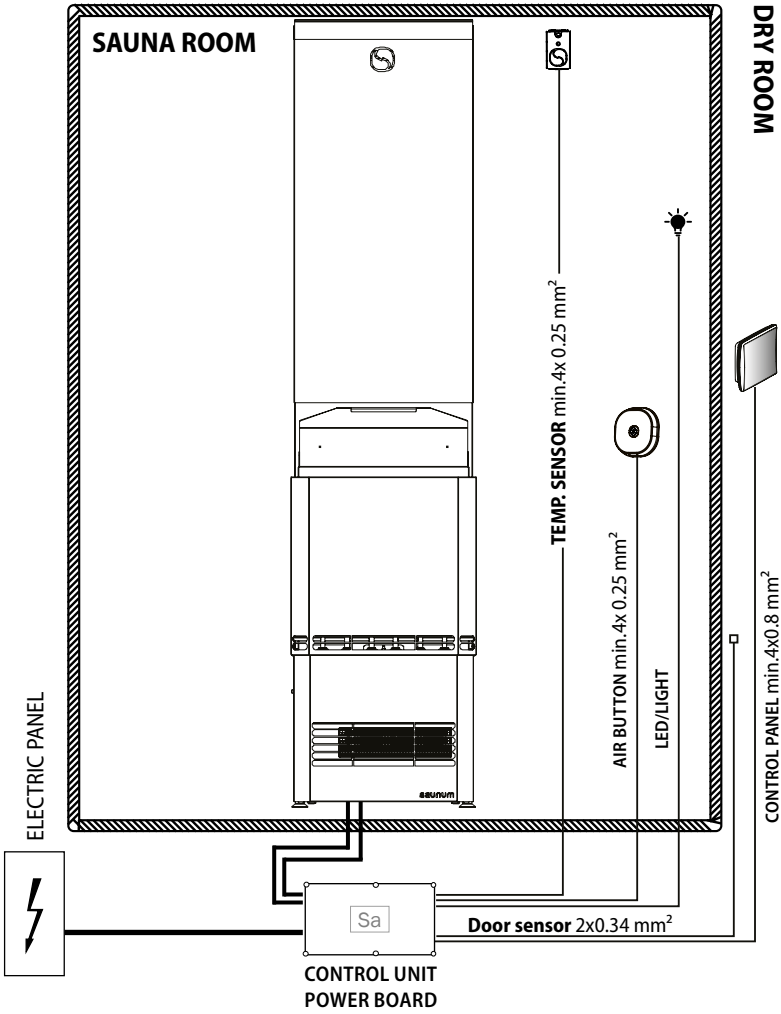

(DRY ROOM – VESTIBULE / CEILING / ELECTRICAL PANEL AREA)

ELECTRICAL CONNECTION

Saunum Air L 15kW

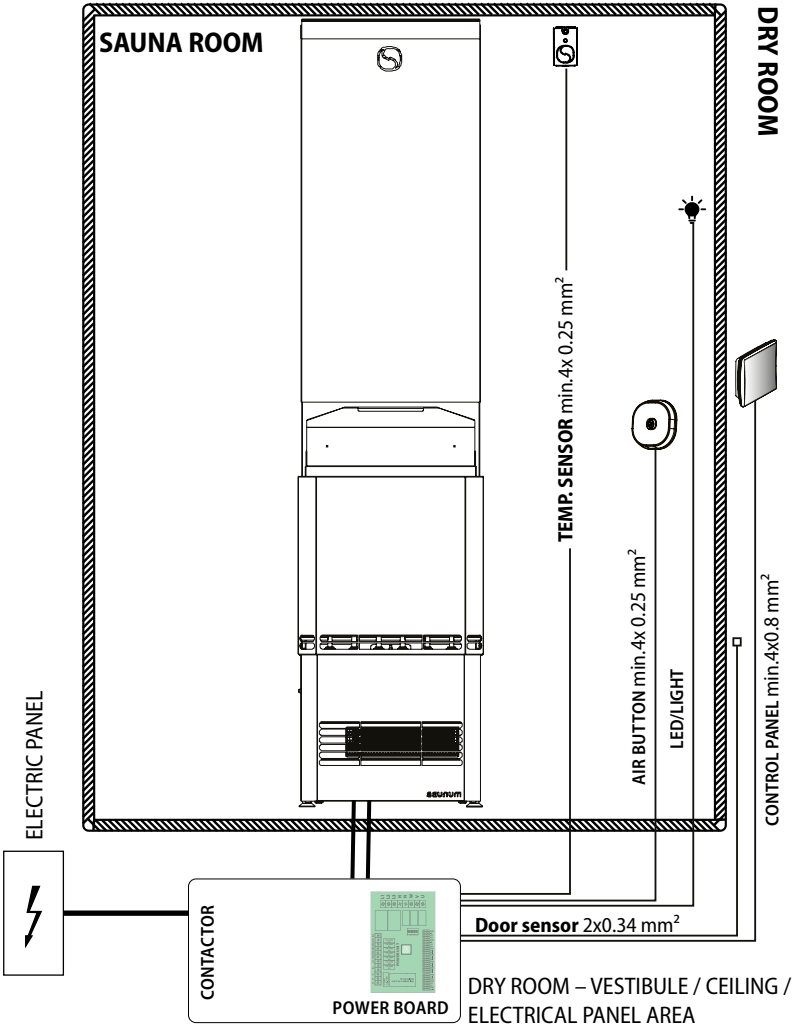

INSTALLATION

1. Install the flue cap (**A**) and centre the heater housing in relation to the cap **(B).**

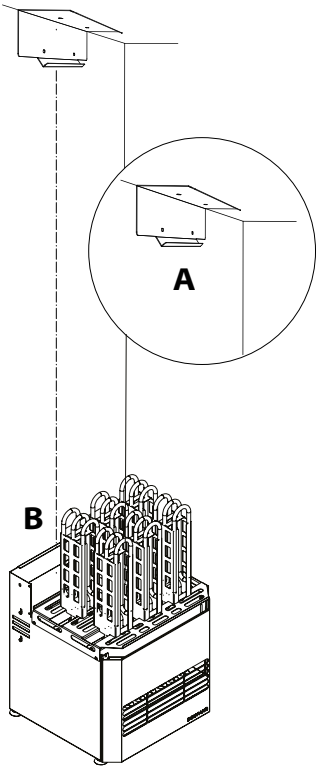

Place the flue cap at the connection point between the wall and the ceiling and fasten with a mounting suitable for the base material. It can be attached to the wall and/or the ceiling. Centre the heater under the cap and adjust the feet so that the device is level.

2. Place the parts of the telescopic flue inside each other. Position the lower flue section on the flue socket and level the heater. Adjust the housing if needed. Secure the flue with the bolt/screw shown in the diagram.

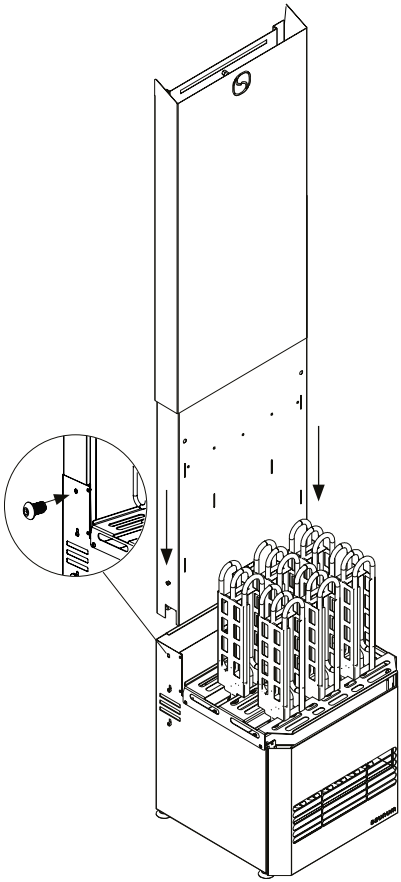

3. Hang the telescopic flue on the cap (**A**)

4. Install the heat shield (**B**). Install the heat shield guide (**C**).

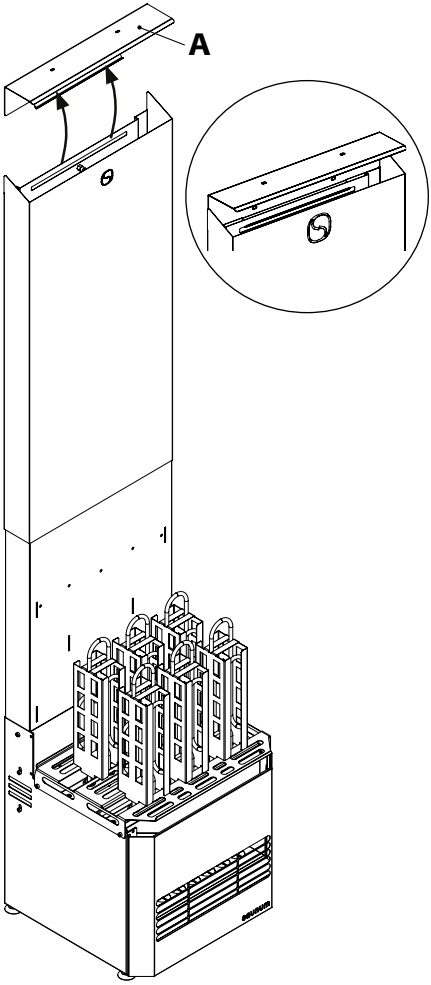

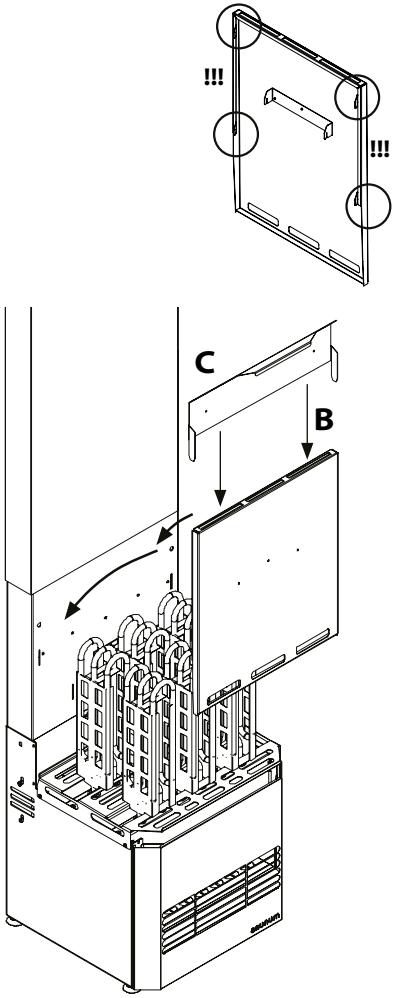

5. Remove the protective film from the stone basket (**C**) and attach the basket using the hooks in the openings behind the telescopic flue. Fill the stone basket manually with the heater stones.

6. See also **LOADING THE STONES** on **page 38!**

Fill the basket evenly with stones, wearing gloves to protect your hands!

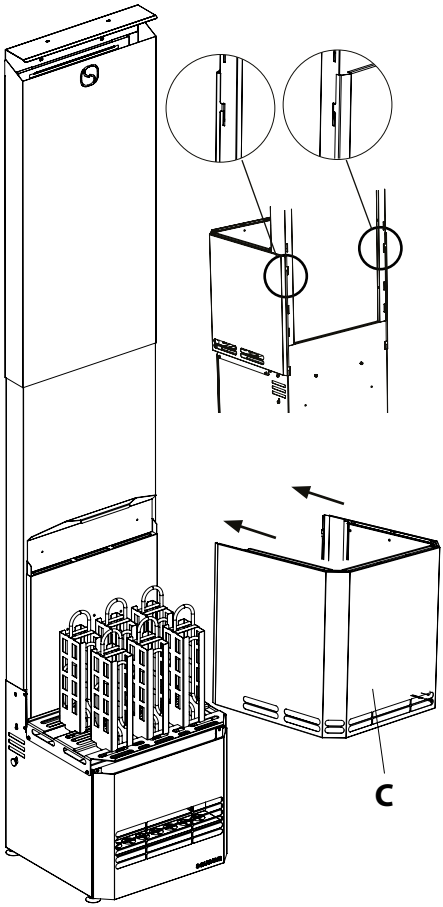

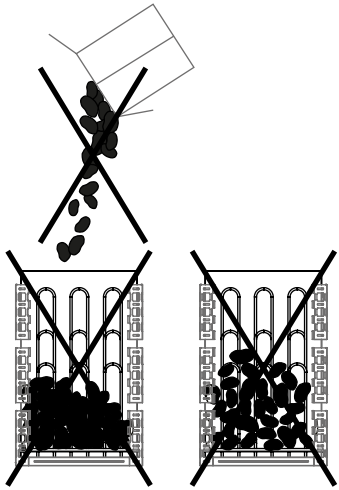

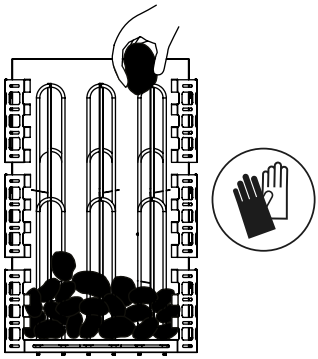

7. Install the Himalayan salt spheres.

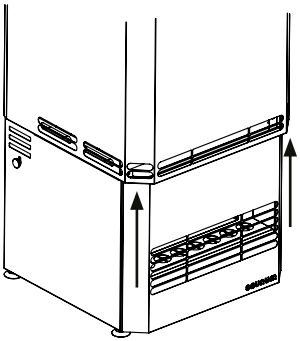

7.1 Pull from under the output grille edge outwards.

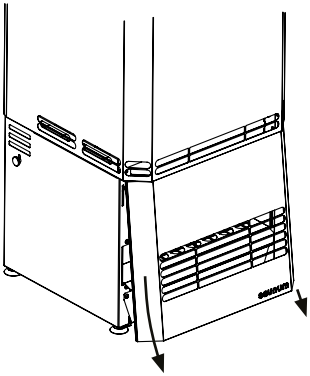

7.2 Remove the output grille by holding it slightly tilted and pulling it downwards.

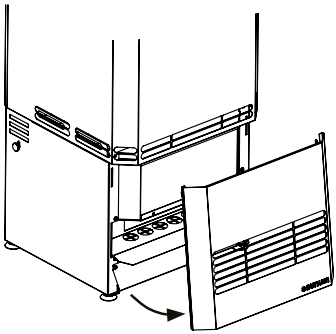

7.3 Take the salt spheres out from the textile bag. Place the Himalayan salt spheres in the sockets so that each salt sphere is on one socket.

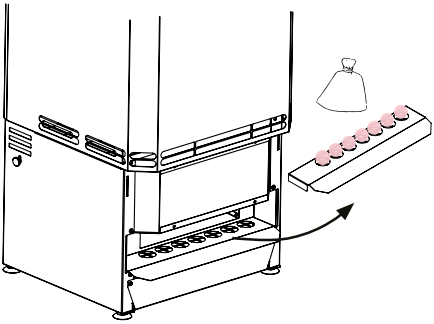

NOTE! It is recommended to rinse the base of the salt tray at least once a year

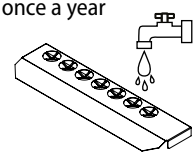

INSTALLING
THE CONTROL PANEL

For concealed installation, the control panel can be mounted into a standard flush-mounted installation box (Ø 68 mm). If concealed installation is not possible, the control panel must be installed on the wall surface.

The control panel must be installed on the wall **outside the sauna room**, in a place protected from water splashes. When used outdoors, it must be installed inside a protective enclosure.

1. **Remove the wall mount from the device.**

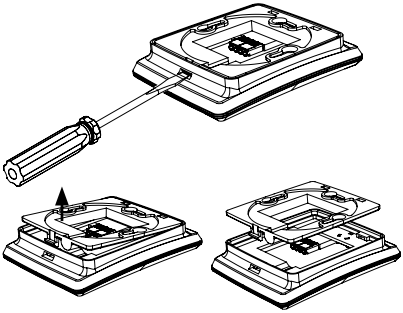

2. **Thread the data cable through the hole in the wall mount and fasten the wall mount to the wall with screws.**

min 4 x 0,8 mm²

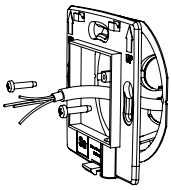

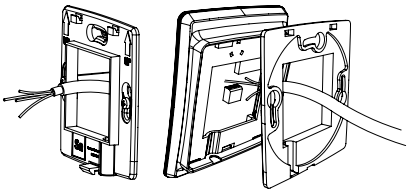

3. **Connect the data cable to the panel connector.**

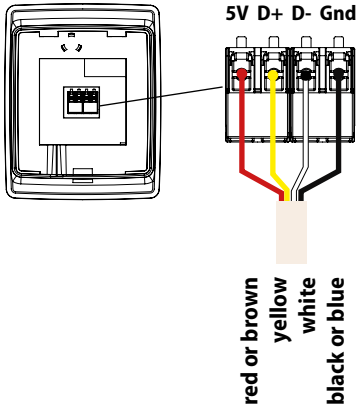

4. **Press the control panel into the wall mount.**

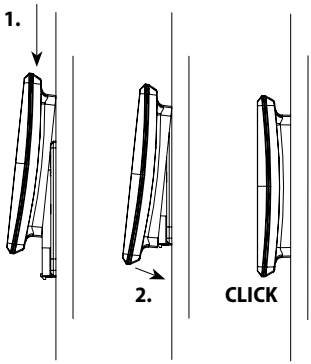

INSTALLING
THE DOOR SENSOR

The door sensor is a magnetic switch that is attached to the door frame of the sauna room.

When the door is closed, the circuit of the door sensor closes, allowing the sauna control unit to operate.

The door sensor prevents the risk of overheating caused by a door that has been left open.

The door sensor consists of two components: a sensor and a permanent magnet.

- Connect the cable to the sensor wires.
- Attach the magnet to the door using double-sided tape. It must allow the door to close and be positioned close to the door frame.
- Attach the sensor to the door frame, aligning the sensor and the magnet when the door is in the closed position.
- The maximum gap between the sensor and the magnet when the door is closed must not exceed 5 mm

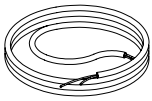

Extension is permitted using a 2 × 0.34 mm^2 cable.

DOOR SENSOR

MAGNET - place it on the door

SENSOR

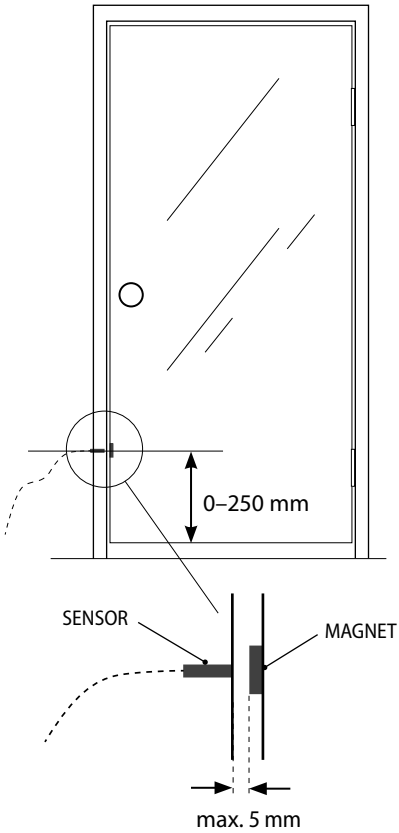

INSTALLING
THE AIR BUTTON

Install the Air Button inside the sauna room. The button may be installed on the sauna wall or on the bench.

Install the button at a practical and easily accessible height for the user.

The button must be installed:

– no higher than 1300 mm above the floor;

– at least 500 mm from the heater.

If the connection and installation cables are located higher than 1,000 mm from the sauna room floor or routed inside the walls, they must be rated to withstand temperatures of at least 125 °C (e.g. SSJ-type cables).

For concealed installation, the data cable may be installed inside a protective tube within the wall. If this is not possible, the cable must be installed on the wall surface.

The Air Button is IPX2 rated and must be installed on a wall area protected from water splashes.

Installation steps:

1. Use the printed template to mark the locations for the screw holes and the cable opening (Ø 20–23 mm). If the cable is not concealed inside the wall, the opening may be only 5 mm deep or formed as a groove using a sharp blade.

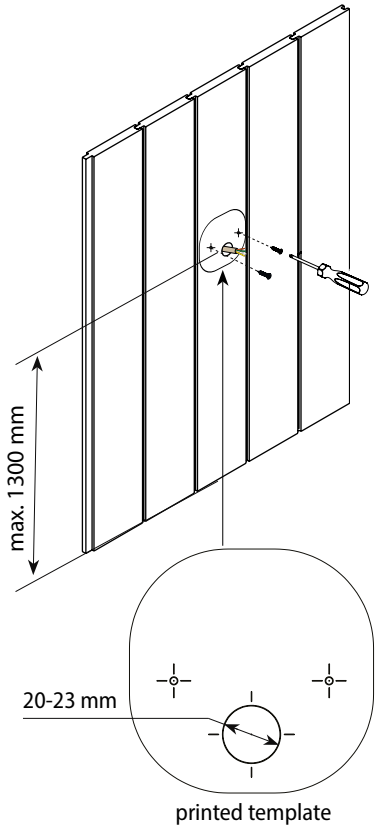

2. Install the screws, leaving the heads protruding 3–4 mm from the wall. Drill the cable opening through the wall and route the cable to the opening. Pull enough cable through to connect it to the button terminals.

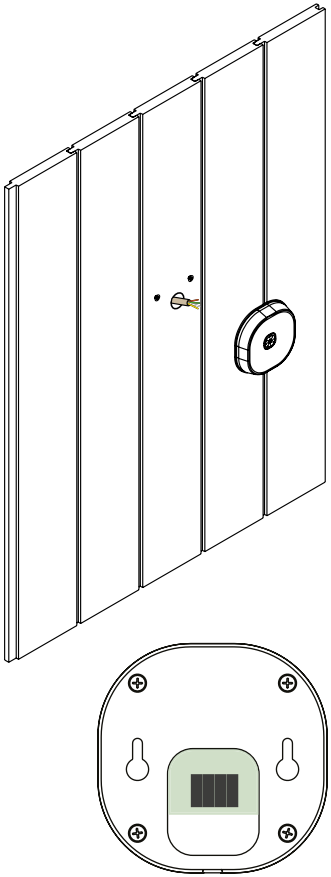

3. Connect the wires to the button connector. Make sure the wires are connected to the control unit using the same colour code order (see the illustration below).
4. Attach the button to the wall by aligning the screw heads with the keyholes on the back of the button.

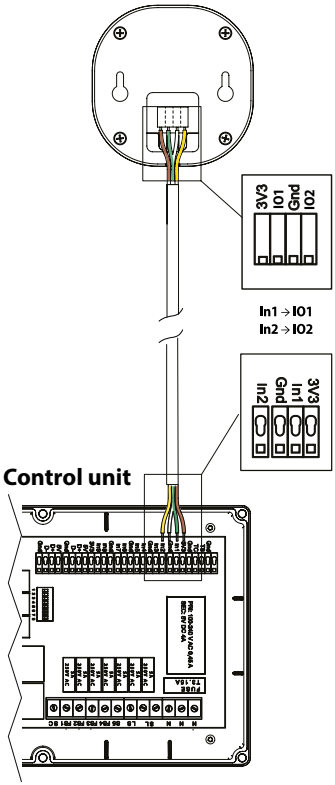

TEMPERATURE SENSOR

Prepare the installation location for the temperature sensor as shown in the diagram below, according to the layout of your sauna.

The temperature sensor may only be installed within the area marked as a "possible location" or "alternative location" in the diagram.

Airflow near a ventilation opening may cool the sensor, causing the control unit to receive incorrect temperature readings. This may lead to the heater overheating.

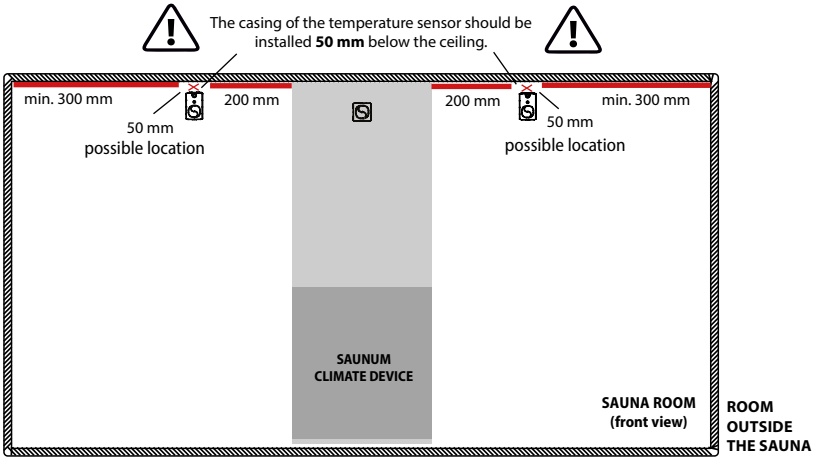

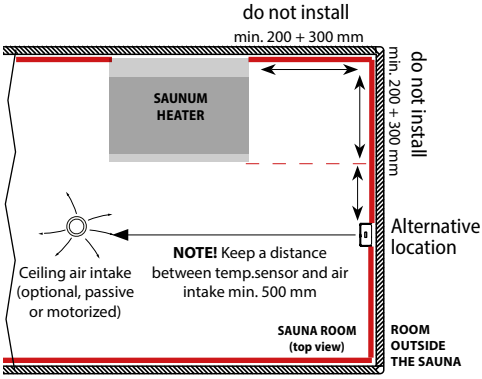

Barrel Sauna
Temperature Sensor Location

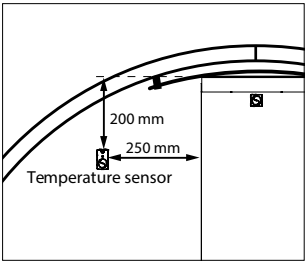

TEMPERATURE SENSOR

To install the temperature sensor/ overheating protection, proceed as follows.

- Connect the cable to the temperature sensor's plugs.
- Screw the temperature sensor onto the wall (see figure).
- The temperature sensor cannot be placed above the heater.
- The temperature sensor must not be installed near any air openings (such as ventilation openings, doors, or windows) and must be located at least **500 mm** away from the air intake.
- **The sensor must not be obstructed on any side except at the back.**

The airflow near an air vent cools down the sensor, giving the control unit inaccurate temperature readings.

As a result, the heater might overheat.

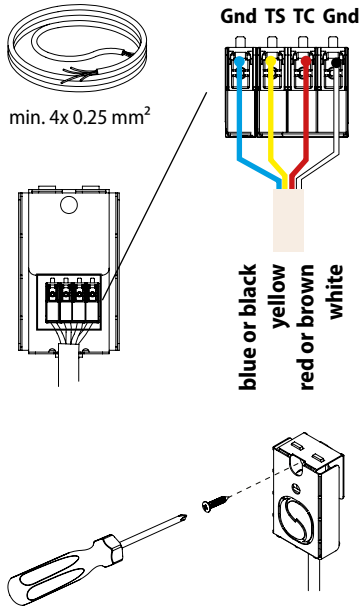

LOADING THE STONES

Amount of stones:
(quantities are approximate)

Saunum Air L with a closed basket 80 kg

Saunum Air L with an open basket 85 kg

Before loading, open the stone box and sort the stones by size.

Start stacking from the bottom section of the basket, using larger stones first. This helps to create air channels that improve hot air circulation around the heating elements.

Stacking stones has a great effect on the operation of the heater.

Important to know:

- The diameter of the stones must be 5–10 cm.
- Only stones sold for saunas are intended for use in the heaters.
- Do not use light, porous ceramic "stones", or soft tiles in the heater. They do not store enough heat when heated and can result in damage to the heating elements.
- Wash any dust off the stones before placing them in the heater.

NB! When using Saunum equipment, we always recommend doing so with high-quality polished sauna stones!

When loading the stones, note:

- Do not allow the stones to fall into the heater.
- Do not force the stones between the heating elements.
- Do not allow the stones to rest on the heating elements with their own weight, but load the stones so that they support each other.
- Do not stack the stones on the heater.
- Do not place any objects near the stone compartment or the heater fan that could alter the volume or direction of airflow through the climate device.

WARNINGS

Staying in the sauna room for a long time raises your body temperature, which may be dangerous to your health!

- Do not touch the hot heater – the stones and the outside of the heater may burn you!
- Saunum strongly recommends using the **Saunum Safety Rail** around the heater to reduce the risk of accidental contact and potential burns.
- Be careful when moving in the sauna room, as the bench and the floor may be slippery!
- Do not hang towels and clothes to dry in the sauna room – this may cause a fire hazard!
- Make sure you have proper ventilation in the sauna room. Saunum is not responsible for possible salt corrosion of equipment and machinery.
- Excessive humidity may cause malfunction or failure of electrical components.
- Sea air and humid climates may cause an iron oxide layer (rust) on the metal surfaces of the heater!
- Clear obstructions closer than 500 mm in front of the fan opening!
- Sauna users must not keep their feet or other body parts closer than 500 mm in front of the working fan!
- Do not allow children, disabled or sick people into the sauna room without supervision!
- Consult a doctor about medical concerns related to steam, heat, and/or salt treatment!
- Make sure you are not allergic to salt treatment. Saunum is not responsible for potential side effects of salt treatment in the sauna room!
- Do not go to the sauna under the influence of alcohol, drugs, or narcotics!
- Do not sleep in the hot sauna room!

Hyperthermia

Hyperthermia occurs when the internal temperature of the body reaches a level several degrees above the normal body temperature of 37 °C The symptoms of hyperthermia include an increase in the internal temperature of the body, dizziness, lethargy, drowsiness, and fainting.

The effects of hyperthermia include:

- Failure to perceive heat;
- Failure to recognize the need to exit the room;
- Unawareness of impending hazard;
- Fetal damage in pregnant women;
- Physical inability to exit the room; and,
- Unconsciousness.

WARNING – The use of alcohol, drugs, or medication is capable of greatly increasing the risk of fatal hyperthermia.

HEATING
THE SAUNA ROOM

Before using the heater for the first time, make sure that:

- the electric heater is equipped with a control panel and heater stones;
- the electrical connections meet the requirements;
- the supply voltage corresponds to the nominal ratings allowed for the device;
- the protective earth (PE) is in working order;
- the attachments of the device housing are in order;
- the heater is properly attached to the wall;
- the over-current fuses are in working order;
- the fan rotor rotates smoothly;
- there are no tools or materials left after mounting the device in the housing.

When switching the device on, check:

- the direction of the air flow – the air is drawn in through the upper opening and discharged through the lower opening;
- that there is no vibration or excessive noise when the fan is running.

When the heater is switched on for the first time, the heating elements and stones will emit an odour. The sauna room must be properly ventilated to remove the odour.

If the power of the heater is suitable for the sauna room, it takes 45-90 minutes to reach the desired temperature in a properly insulated sauna room. The stones are usually heated to the steam temperature at the same time as the sauna room.

Only switch the device fan on just before entering the sauna room – this will help to prevent the sauna bench from overheating and an excessive energy consumption.

Saunum's recommended temperature for sauna operation is 65 °C to 80 °C.

USING THE SAUNA
CLIMATE DEVICE

Before switching on the heater, make sure that no objects or items have been left on or inside the heater.

The operating time of the climate device can be adjusted using the touch control panel.

Do not connect the device directly to mains power. Connection must be made through the control unit according to the wiring diagram!

- The device must not be used if the components of its housing have been removed and/or the wiring diagram has been changed.
- Children should not be allowed to access or play with the heater.
- When switching the device on and off, refer to the instructions for use of the control unit.

After using the sauna, make sure that all parts of the heater are switched off (the heating and the fan have stopped).

ADJUSTING
THE TEMPERATURE

During the heating of the sauna room, the air circulation fan of the heater must be switched off.

This ensures faster heating of the sauna room and prevents the bench from becoming excessively hot during the heating phase.

To determine the appropriate operating settings, start with a lower target temperature and the lowest airflow speed.

If the temperature becomes too high while in the sauna room, reduce the target temperature or decrease the fan speed of the heater.

REGULATION OF THE
SAUNA

The airflow generated by the device is controlled via the touch control panel, where the desired fan speed can be selected (three speed levels available). The fan speed can be preset or adjusted once the target temperature has been reached.

The Air Button installed inside the sauna room allows the user to change the fan speed during the sauna session without leaving the sauna.

To regulate the steam temperature, use the steam air cooling damper on the left side of the heater housing (see page 9, E). The recommended setting is 1/3 open. Open the damper gradually to cool the steam.

USE OF **HIMALAYAN SALT**

The Saunum heater comes with Himalayan salt spheres. The use of salt spheres in the device is optional and does not affect the main function of the device if they are not installed.

To use the salt spheres, they must be installed in the sockets between the air outlet grille and the fan. Make sure that each salt sphere is correctly seated in its slot and does not obstruct the fan.

To install or remove the salt spheres, remove the air output grille (see page 31) and place the salt spheres in their sockets. After installing or removing the salt spheres, reposition the air output grille. The Saunum heater may only be used with the air output grille in place!

Do not use/start the device if the salt spheres become dislodged near the fan housing!

⚠ The use of third-party salt spheres is not covered by the device warranty.

LADLING WATER **ON THE HEATER**

The air in the sauna becomes dry as it heats up. Therefore, it is necessary to create steam to achieve a suitable level of humidity. The effects of heat and steam on people are different. When testing the different settings of the heater, you will find the most suitable combination of temperature and humidity.

The volume of the sauna ladle should not exceed 0.2 litres. When throwing water, the amount of water should not exceed 0.2 litres, because by pouring too much water on the stones at once, some of it may be sprayed outwards in splashes of boiling water.

Make sure that people are at a safe distance from the heater when creating steam!

Hot steam and water splashes cause skin burns.

The water to be ladled or tossed lightly onto the heater must meet the requirements for clean domestic water. Only fragrances specially designed for sauna may be used in the water. Follow the instructions on the package.

NB! Do not pour water into the device's ventilation openings.

WATER QUALITY REQUIREMENTS

The water used for ladling onto the heater must comply with domestic water quality standards.

To prevent corrosion, scaling, and damage to the heater components, ensure that the water does not exceed the maximum concentration of impurities listed below.

Water properties	Effect	Maximum impurity level
Organic impurities	Colour, taste, precipitates	12 mg/l
Iron concentration	Colour, odour, taste, precipitates	0.2 mg/l
Manganese (Mn) concentration	Colour, odour, taste, precipitates	0.10 mg/l
Hardness (main substances: magnesium (Mg) and calcium (Ca))	Precipitates	Mg: 100 mg/l, Ca: 100 mg/l
Chloride-containing water	Corrosion	Cl: 100 mg/l
Water electrical conductivity	Corrosion, faster electrochemical reactions	3000 µS/cm

Do not use chlorinated water, seawater, water containing arsenic or radon. Such water poses a health risk and causes rapid corrosion of metal components.

MAINTENANCE

Due to large temperature fluctuations, stones tend to break down. Stones must be restacked at least once a year and even more frequently when using the sauna often. When restacking the stones, remove stone fragments from the bottom of the heater and replace the broken stones with new ones. By monitoring this, the heating capacity of the heater remains optimal and the risk of overheating is avoided.

If you use Himalayan salt spheres with the heater, it is recommended to inspect the salt spheres once a year and, if necessary, replace worn and broken salt spheres with new ones. Make sure that there are no foreign objects in the device fan air vents.

Do not leave the fan of the heater running when the sauna is not in use – this will cause unnecessary energy consumption and may overheat the sauna bench.

CAUTION! Before maintaining and cleaning, the device power supply must be disconnected from the power and/or utilities, and the moving parts of the unit must completely stop.

Before servicing and cleaning the Saunum Air L, make sure that:

- the heater is disconnected from the power and/or utilities (in addition to the device's power switch, also by means of over-current breakers or fuse);
- the device fan has stopped completely; the prescribed occupational safety and personal protective equipment is used when performing the work;
- the connection cables are undamaged. In the event of damage to the connection cables, have the cables replaced by a qualified electrician in accordance with the applicable standards and requirements before continuing maintenance and cleaning work.

The device housing can be cleaned with a cloth dampened with water. Do not use pressure washers, running water, chemical cleaners, or solvents to clean the housing!

Use a 10% citric acid solution to remove scale and rinse with water.

Excessive dirt can prevent the fan from operating correctly, causing an increase in noise when operating. Noise may also increase due to damage/bending of the fan blades. Make sure that there are no foreign objects in the device's fan air vents.

MAINTENANCE

The fan will naturally stay free of debris with regular use. If cleaning is needed, we recommend contacting a sauna airflow specialist.

CAUTION! Using compressed air to clean the fan can permanently damage the fan rotor! The fan bearings are maintenance-free and must be replaced if problems occur.

It is recommended to check all electrical connections of the Saunum Air L at least once a year. This can be done by a certified electrician.

Contact a qualified sauna service specialist to perform maintenance. In the case of any disturbances in the operation of the heater, stop use of the device immediately and have the device inspected by a person authorized by Saunum.

SOLVING PROBLEMS

THE SAUNUM HEATER IS NOT HEATING OR BLOWING AIR. ENSURE THE FOLLOWING:

- That the heater breakers and fuses are in working order.
- That all wiring is properly connected.
- That the device is switched on.
- Make sure that the selected target temperature is set high enough for normal operation.
- Make sure that the sauna door is closed.

THE SAUNA ROOM HEATS UP TOO SLOWLY. THE WATER LADLED OVER THE STONES COOLS THEM DOWN QUICKLY.

- Make sure that the device's air circulation fan is switched off during sauna room heating.
- Make sure that the breakers and fuses of the heater are in working order.
- Increase the selected temperature on the control panel.
- Make sure that the power output (kW) of the heater is sufficient.
- Check the stones. Stones that are placed too tightly, falling down/sinking closer over time, or the wrong type of stone may interfere with the air flow through the heater and therefore reduce the heating speed.
- Make sure that the ventilation of the sauna room is correct.

THE SAUNA ROOM HEATS UP QUICKLY, BUT THE TEMPERATURE OF THE STONES IS INSUFFICIENT. THE WATER THROWN ON THE STONES FLOWS DOWN.

- Make sure that the power output (kW) of the heater is not too high. If the power of the heater is suitable for the sauna room, it takes 45–90 minutes to reach the desired temperature in a properly insulated sauna room.
- Make sure that the ventilation of the sauna room is correct.

THE WALL COVERING OR OTHER MATERIAL NEAR THE HEATER BECOMES DIRTY QUICKLY.

- Observe the safety distance requirements.
- Make sure that no heating elements are visible between the stones. If the heating elements are visible, turn off the device, let the stones cool, and lift them so that the heating elements are completely covered.

⚠ Stones placed too sparsely may cause the heating elements to overheat and make the indoor climate of the sauna room uncomfortable and may cause a fire hazard!

THE WOODEN SURFACES OF THE SAUNA ROOM BECOME DIRTY OVER TIME.

This process may be accelerated by:

- direct or indirect sunlight
- warmth produced by the heater
- wall protective oil/wax product
- fine particles from the stones.

THE HEATER SMELLS.

- See section HEATING THE SAUNA ROOM (**page 40**).
- A hot heater may amplify odors mixed with air, but this, however, is not caused by the sauna nor the heater. Causes include paint, glue, oil, spices, etc.

THE SAUNUM HEATER IS MAKING NOISE.

- There is always a certain noise when the fan is running. If it is not uniform and/or accompanied by a metallic sound, the fan is likely to need maintenance or repair. Check that there are no foreign objects in the fan air vents.
- Try switching the fan to a lower speed.
- Loud sounds are likely to be caused by stones cracking due to heat.
- Thermal expansion of the heater parts may cause noise when the heater warms up.

CONTROL PANEL MESSAGE "DOOR SENSOR"

If the sauna door remains open for more than 20 seconds, the heater will stop heating. Once the door is closed, the heater will resume normal operation.

CONTROL PANEL MESSAGE "THERMAL CUTOFF"

The sauna room or heater is critically overheated.

Let the room cool down about 10 minutes and push the reset button.

See how to do it on **page 48**.

CONTROL PANEL MESSAGE **"THERMAL CUTOFF"**

During a sauna session, the sauna room or the heater may overheat, activating the **thermal cutoff** for safety. In this case, heating stops automatically.

ACTIONS

Although all sauna functions are disabled when the thermal cutoff is activated, the sauna screen remains active so that the user can view the current sauna status, the set target temperature, and other relevant information.

1. Stop the sauna session by pressing **STOP** on the control panel.
2. Allow the sauna room to cool down for approximately **10 minutes** or until the temperature reaches about **60–65 °C**.
3. **After that, reset the temperature sensor** by pressing the reset button located in the temperature sensor housing on the wall.

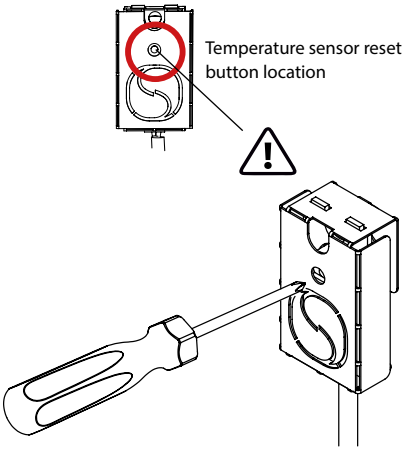

After **resetting** the sensor, the **control unit** should resume operation within **2 to 3 minutes**.

If the automatic restart does not occur, make sure the sensor has been reset correctly, then **switch off the main circuit breaker**, wait **10 seconds**, and switch it back on.

If the error still persists after restarting the system, contact an authorized service center.

INSTALLING AND REPLACING THE HEATING ELEMENTS

The heating elements are connected to the device via screw terminals. It is necessary to disconnect the screw terminals before removing the heating elements.

Use an appropriate tool (e.g. 4 mm or 5 mm Allen key, depending on the type of screw used) to remove the wires from the heating elements.

DIN 912, M4 × 6

DIN 6798 A, M4

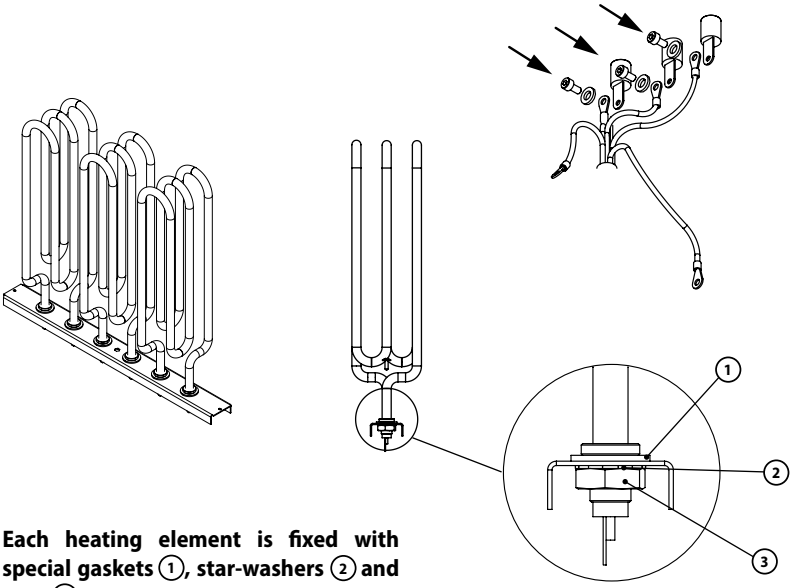

Each heating element is fixed with special gaskets ①, star-washers ② and nuts ③.

Use 24 mm metric socket wrench to remove the nut.

24 mm

WARRANTY

With the Saunum device warranty, Saunum guarantees that the product will be free from defects in the materials and the assembly for a specified period after the date of purchase. If, during the warranty period, the device is found to be defective due to the use of substandard materials or the quality of the assembly, Saunum's recommended repair partners will repair or replace the device or its defective part under the conditions set out below. Saunum reserves the right to decide whether to replace the defective product component or to replace the device with a new one. The replaced defective product components remain the property of Saunum.

Warranty conditions:

1. The warranty is only valid if a completed installation report is submitted with the claim.
2. The device has been connected to the power network by a qualified electrician in accordance with the regulations in force.
3. The warranty period of the sauna climate device when used in a private sauna is two (2) years.
4. The warranty period of the sauna climate device when used in a public sauna is one (1) year.

Not covered by the warranty:

1. Saunum will not cover labor cost.
2. Routine maintenance and cleaning of the device and replacement of the components due to normal wear and tear.
3. Adaptation or modification of the device for any purpose other than that indicated in the instructions for use.
4. Risks arising from transport.
5. Damage resulting from the misuse of the device.
6. Damage resulting from the improper installation of the device;
7. Repairs to the device not carried out by Saunum's recommended repair partner (maintenance partner).
8. Accidents, lightning, water, fire, improper ventilation, or any other factor beyond the control of Saunum.
9. Breakages caused by the use of stones and salt spheres not recommended by Saunum.
10. The heating elements and the salt spheres.

Read all of the instructions for use carefully and thoroughly <u>before using the device</u> and keep them in a safe and easily accessible place.

INSTALLATION **REPORT**

Date of purchase: _____ Date of installation: _____

Heater type: _____

Sticker/serial number:

Place of installation: _____

Installed by: _____

Checked by: _____

Date, signature: _____

Description of the work done: _____

All the details are available for the installation _____

There are no color defects or dents _____

Installed on the wall or on the floor according to the instructions _____

The electrical connections are made according to the installation instructions _____

All the heating elements heat up _____

The three fan speeds are working / in the correct order _____

Notes: _____

Customer's contact (name, email address): _____

Received work: _____

Warranty start date: _____

You can find the list of Saunum Saunas OÜ's recommended installation and maintenance professionals on the Saunum Saunas OÜ website **www.saunum.com** or by contacting us at **info@saunum.com**

Please note! The device may only be connected to the power network by a qualified electrician in accordance with the regulations in force.

PATENT REGISTRY

PCT/EP2023/070940
EP3167864
EP23749032.1
EP3167865
US12491131
US19505046
CA3222450
CA3299327
AU2023455694

EC declaration of conformity

Manufacturer: Saunum Saunas OÜ
Address: Suur-Paala 19, 11415 Tallinn, Estonia

certifies that the product:

Sauna heater with climate device
Saunum Air

complies with the requirements of the following directives of the Council of Europe, provided that the installation has been performed in accordance with the installation instructions issued by the device manufacturer and the instructions
EN 60 204-1 “Safety of the machinery. Electrical equipment for the machinery – Part 1: General requirements”:
Machinery Directive 2006/42/EC
Low Voltage Directive 2014/35/EU
Electromagnetic Compatibility Directive 2014/30/EU.